FläktGroup®

SEMCO®

EASY ASSEMBLY

ACOUSTIC PERFORMANCE

ACOUSTIC/THERMAL PANELS

TECHNICAL GUIDE

ACOUSTIC

THERMAL

PANEL
SOLUTIONS

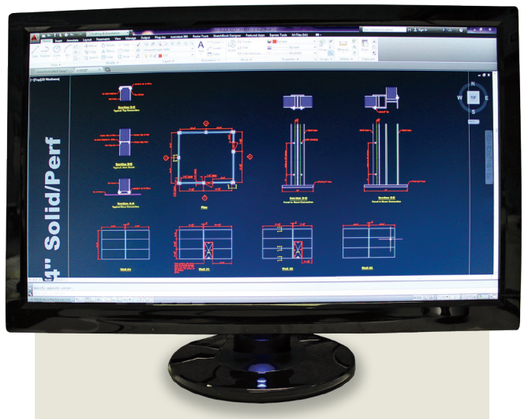

Independently Tested for Acoustical, Thermal, and Structural Performance

Excellent cost-to-performance ratio

Factory-supplied cutouts, make a stronger structure while minimizing installation time

The success of solving noise problems is dependent upon the characteristics of sound, having an appreciation for unpredictable factors, and being familiar with the equipment. Like many challenges, there is more than one possible solution for each noise abatement project. We would like to create unique, cost-effective solutions to all your noise problems.

Performance and quality are more than just words at FläktGroup® SEMCO®; they are an integral part of every product we make and the service we provide. Our products are backed not only with a history of satisfied customers, but also with a continuing commitment to quality and service.

Our Design/Drafting Department uses the latest in CAD (computer aided design) to ensure accurate system layout. Our automated panel layout program reduces the number of panels in our systems by utilizing factory-supplied cutouts, making the strongest structure possible while saving time during installation.

FläktGroup SEMCO's AT-PANEL Acoustic/Thermal Systems have been independently tested for acoustical, thermal, and structural performance, giving you the assurance that our system will perform as required.

Information is provided on several types of acoustical panels with corresponding performance data and specifications. Keep in mind that most units are custom-designed to fit each application. The information contained in this brochure is intended to assist you in selecting the noise abatement product that will best fit your project requirements. We look forward to providing your noise abatement solution.

AT PANEL SOLUTIONS
ACOUSTIC/THERMAL SYSTEMS

HIGH-QUALITY EFFICIENCY. **PERFORMANCE YOU CAN COUNT ON.**

The FläktGroup® SEMCO® AT-PANEL Acoustic/Thermal panel system offers performance-engineered assemblies made of quality constructed double wall panels for your built-up AHUs, intake and relief plenums, and extended plenums.

MATERIALS AVAILABLE

- Galvanized steel
- Powder Coated
- Stainless steel
- Aluminum
- Aluminized

PANEL SIZES AVAILABLE

- 2" thick
- 3" thick
- 4" thick
- 5" thick
- 6" thick

IF YOU NEED A CUSTOM SIZE, MATERIAL, OR COATING, WE WILL WORK WITH YOU TO CREATE A **CUSTOM SOLUTION.**

EASE OF **INSTALLATION**

Unlike our competitors' panel systems, the FläktGroup SEMCO assembly does not require screws at the joint. Our joint design will ensure a leakage rate of less than one half percent (<0.5%). This is achieved using only a bead of factory supplied LEED certified caulk.

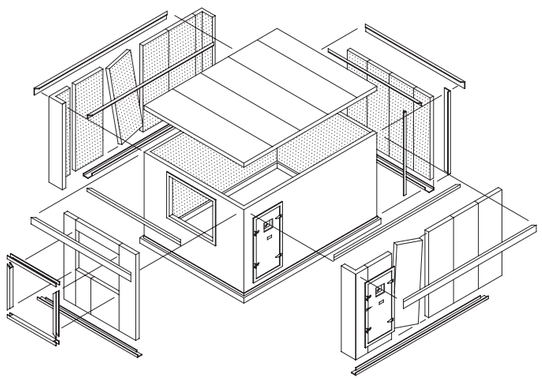

Pre-formed corner panel reduces field labor while increasing overall unit strength.

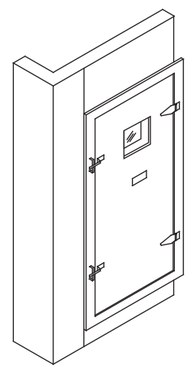

Access doors are supplied pre-hung with all hardware factory installed.

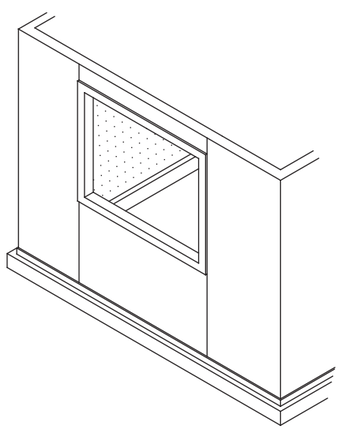

Factory provided round or rectangular openings eliminate the need for major field cutting.

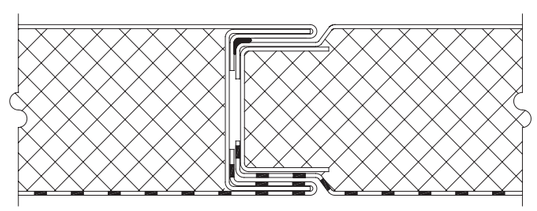

Tongue-and-groove panel is fully insulated at the male-female joint. We give you a better acoustic and thermal joint with less installation time.

The effectiveness of a built-up housing and/ or plenums depend upon a quality design and proper installation. FläktGroup SEMCO's design enhances the close tolerance and effectiveness of the tongue-and-groove joint. Assembly is also simplified because FläktGroup SEMCO's panel systems are designed with four basic components: a tongue-and-groove panel, a base channel, inside and outside trim, and pre-hung doors.

These components can be assembled quickly and easily. In fact, each piece is numbered as it is manufactured to match the number on the custom design drawing. This "construction by numbers" process reduces installation time and costs by including easy-to-follow assembly instructions, plus all necessary trim, sealant, and screws.

Installation is simplified with tongue-and-groove joints and pre-formed corner panels, which eliminate the need for corner trim. FläktGroup SEMCO's ease and speed of assembly is unmatched.

Panel to panel, our tongue-and-groove joints seal with only one bead of field-applied, factory-supplied LEED certified caulk.

In all, complete factory engineering offers savings for the installer. Specifying AT-PANEL Solutions allows you more control in construction and reducedinstallation time.

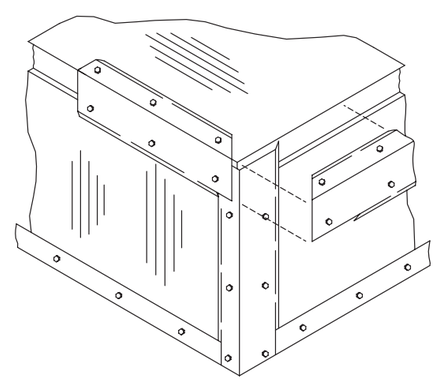

Roof trim easily connects wall panels to the roof with self-tapping sheet metal screws at the roof panel joints and internal channels.

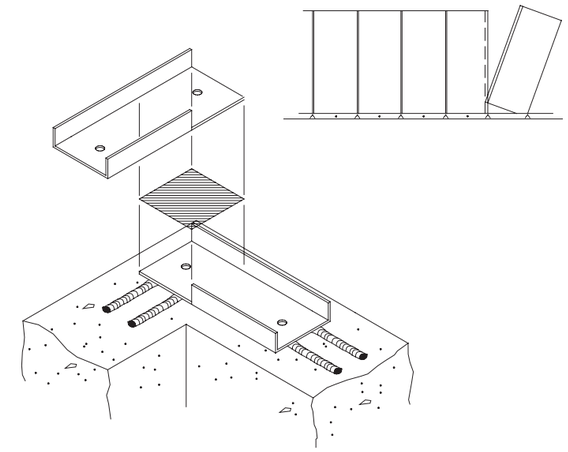

Panels are slipped into the base channel and secured with self-tapping sheet metal screws at the base channel to maintain plumb - screws at the joints are NOT required.

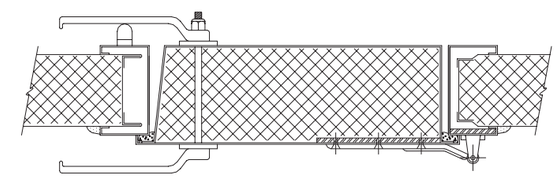

Pre-hung access doors are designed as an integral part of the panel system. Each door is provided with a minimum of two KASON 1061 hinges and FläktGroup SEMCO door latches operable from both sides of the door.

COMPARING
PANEL JOINTS

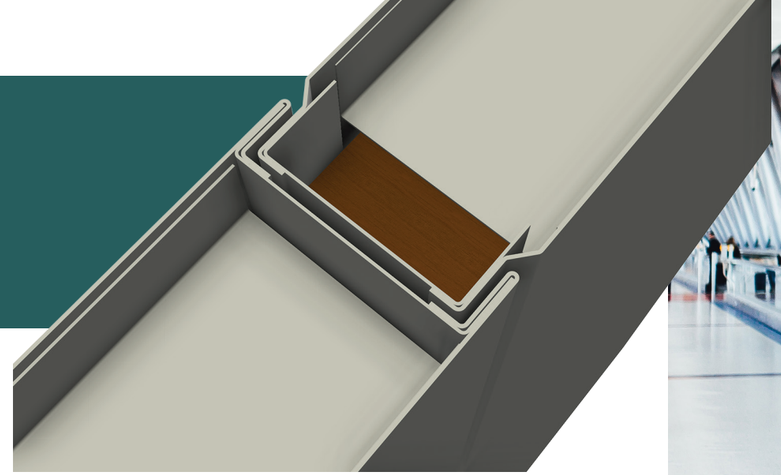

The integrity of the panel joint determines the overall performance of the AT-PANEL Acoustic/Thermal Panel System. Panels must be airtight [leakage rate of less than one half percent (<0.5%)], acoustically sound, rigid, and still be cost-effective during installation. Below are details of the different types of commercially-available panel joints.

FLÄKTGROUP® SEMCO® JOINT

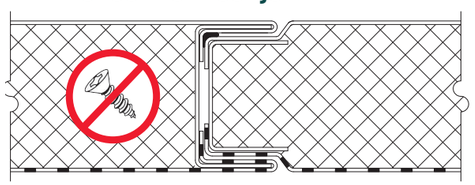

COMPETITOR A

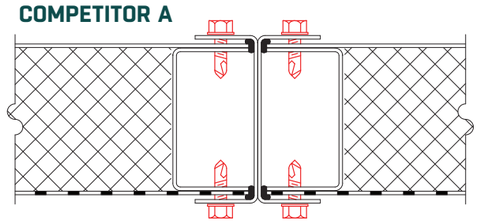

COMPETITOR B

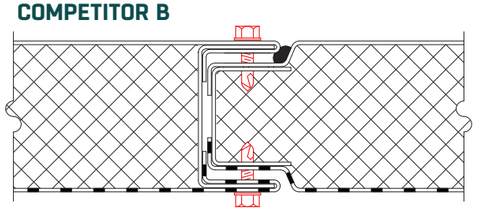

COMPETITOR C

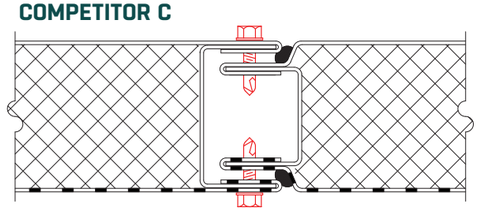

Note: Competitors A, B and C screws are 12" O.C.

Panel Joint Labor Comparison

PANEL TYPE	JOINT-FIELD INSULATED	SCREW JOINT	SEAL JOINT	EXTERNAL "H" JOINER
FLÄKTGROUP® SEMCO®	**No**	**No**	**Yes (1 time)**	**No**
Competitor A	Yes (2 times)	Yes (4 each 12" O.C.)	Yes (4 times)	Yes
Competitor B	No	Yes (2 each 12" O.C.)	Yes (1 time)	No
Competitor C	Yes (1 time)	Yes (2 each 12" O.C.)	Yes (2 times)	No

Labor Calculations*

PANEL TYPE	# OF SCREWS IN JOINT	LINEAR FOOT OF INSULATION FILL	LINER FOOT SEALANT	TOTAL MAN HOURS
FLÄKTGROUP SEMCO	**0**	**0**	**1,000**	**136**
Competitor A	4,000	2,000	4,000	204
Competitor B	2,000	0	1,000	160
Competitor C	2,000	1,000	1,000	170

*Based on a 2,500 sq. ft. enclosure, 10'-0" high or a total of (100) 10'-0" panels that average 25 sq. ft. per panel.

FEATURES AND BENEFITS

Roll formed tongue-and-groove construction, fully enclosed and insulated joint.	Better fit with closer tolerance.
Factory cut and framed openings.	Seals exposed insulation and reduces field labor.
Pre-formed corner panel up to 12'-0" long.	Added strength, rigidity, and easier installation.
No screws through panel joints.	Eliminates the possibility of air and noise leaks that may occur by adding screws and also reduces the installed cost.
Computer aided structural steel design.	Prevents the overkill of structural design, provides end user with calculated safety factor, and reduces installation cost by as much as 15%.
Large 24"x66" standard doors with or without 12"x12" double pane wire glass window.	Lower door cost through mass production and stocking of standard doors.
Optional single door sizes from 18"x48" to 36"x84." Double doors available to 72"x84."	Flexible design to meet special requirements.
Factory interior cuts, semicircular cuts, notches, and sloped ends as required.	Reduces installed costs and accommodates equipment retrofits.
AutoCAD drawings with panel layout, installation details, and individual panel markings.	Shortens the approval process and reduces field labor.
Removable panels up to 43.75"x140."	Easy replacement of component parts.
Paintable exterior is available as an option.	Can be field painted to match other equipment.
Factory applied powder coat for panel exterior available as an option.	Superior coating system.
High transmission loss panel systems. (HTL)	Flexibility in product selection to meet critical noise levels.
Pre-hung doors and completely insulated panel joints.	Saves 10% field labor and provides for a total acoustical and thermal barrier.
No-thru-metal panel.	Especially designed for low temperature and condensation problems that standard panel construction cannot satisfy.
Eliminates field insulation of joints.	Eliminates need for screws at joints.

APPLICATION
GUIDE AND EXAMPLES

APPLICATION	FLÄKTGROUP SEMCO PRODUCT
Outside Air Plenums	2" galvanized panel up to 16'-0" 4" galvanized panel for 17'-0" and higher
Exhaust Plenums (Non-Corrosive)	2" or 4" galvanized panels solid interior
Exhaust Plenums (Corrosive)	2" or 4" 304 or 316 stainless steel solid interior, with optional stainless steel or galvanized exterior
Supply Air	4" galvanized solid exterior/perforated interior
Supply Air (Downstream of Final Filters or Coils)	4" galvanized solid exterior and interior
Supply Air (Medical)	4" galvanized solid exterior/perforated interior with Mylar® liner between perforated skin and insulation
Return Air	2" galvanized solid exterior/perforated interior
Intake/Discharge Plenums	2" or 4" galvanized solid exterior/perforated interior
Extended Plenums	2" galvanized exterior/perforated interior
High Noise Output (Equipment Enclosures)	HTL (High Transmission Loss) Panel System STC of 45.4" galvanized with gypsum board against solid skin
Louver Blank-Offs	2" or 4" powder coated, aluminum, galvanized steel, or uncoated stainless steel
Weather-proof Enclosures	2" or 4" panels with silicone caulk and standing seam roof
High Humidity	4" or 6" (no-thru-metal) panel system

We offer various panel constructions and panel thicknesses depending on the severity of your noise sources. You no longer have to make one standard product meet all of your design needs, which allows you to design specifically for your situation without costly overkill, and more importantly, without compromising your system integrity.

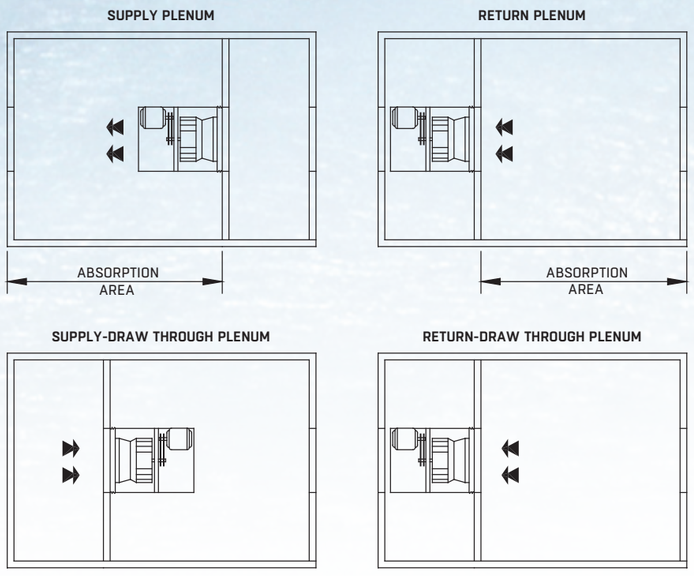

Built-Up Air Handlers

Louver Blank-Off Panels

THE FLÄKTGROUP® SEMCO® AT-PANEL ACOUSTIC/THERMAL PANEL SYSTEM GIVES THE DESIGNER **FLEXIBILITY TO CHOOSE** PRODUCT FEATURES THAT MEET THE NEEDS OF A SPECIFIC APPLICATION.

APPLICATION EXAMPLES

- Outside Air Plenums
- Rooftop Equipment Enclosures
- Fume Hood Exhaust Plenums
- Supply/Return Chase Plenums
- Manufacturing Equipment Enclosures
- Extended Plenums (large rectangular duct)
- Built-Up Air Handlers
- Indoor & Outdoor Barrier Walls
- Relief Air Plenums
- Clean Room Enclosures
- HVAC Mixing Plenums

Extended Air Plenum

Outdoor Noise Abatement

Exhaust Air Plenum

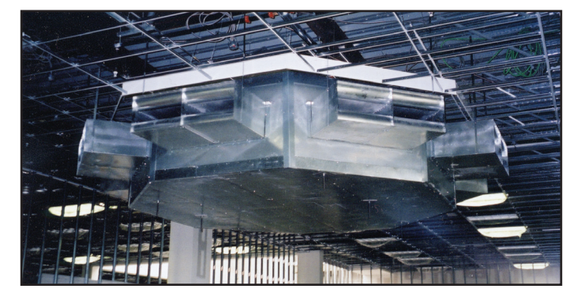
Supply Air Discharge Plenum

PROVEN PERFORMANCE

TRANSMISSION LOSS AND ABSORPTION COEFFICIENT

FläktGroup® SEMCO®'s panel system outperforms all other commercially available modular panel systems. Backed by independently certified test data, our unique tongue & groove panel design provides optimum transmission loss and interior absorption resulting in unequaled STC and NRC ratings.

CONSTRUCTION	ABSORPTION COEFFICIENT					
	2 125	3 250	4 500	5 1K	6 2K	7 4K
2"	0.58	0.93	1.16	1.18	1.15	1.12
4"	0.70	1.14	1.18	1.14	1.14	1.16
6"	0.82	1.14	1.20	1.15	1.15	1.20

CONSTRUCTION	TRANSMISSION LOSS						STC
	2 125	3 250	5 500	5 1K	6 2K	7 4K	
2" 18 gauge solid/22 gauge perforated	26	29	33	44	52	60	38
2" 18 gauge solid/22 gauge solid	29	35	39	47	51	64	39
4" 18 gauge solid/22 gauge perforated	26	32	38	51	60	67	43
4" 18 gauge solid/22 gauge solid	23	37	43	53	60	58	46
4" 18 gauge solid/22 gauge perf. w/ gypboard	27	34	42	53	61	70	45
6" 18 gauge solid/22 gauge perforated	28	38	44	53	62	58	49
6" 18 gauge solid/22 gauge solid	30	40	46	55	63	61	50

FIRE SAFETY

	FLAME SPREAD	SMOKE DEVELOPMENT
Surface Burning Characteristics	15	0

FläktGroup SEMCO's standard panel interior is completely filled with a minimum three pound per cubic foot density glass fiber insulation. Insulation is corrosion and moisture resistant, and rated noncombustible as defined by NFPA Standard 220 when tested in accordance with ASTM E136. Surface burning characteristics per ASTM E84 are listed in the chart on the left.

PLENUM ACOUSTICS

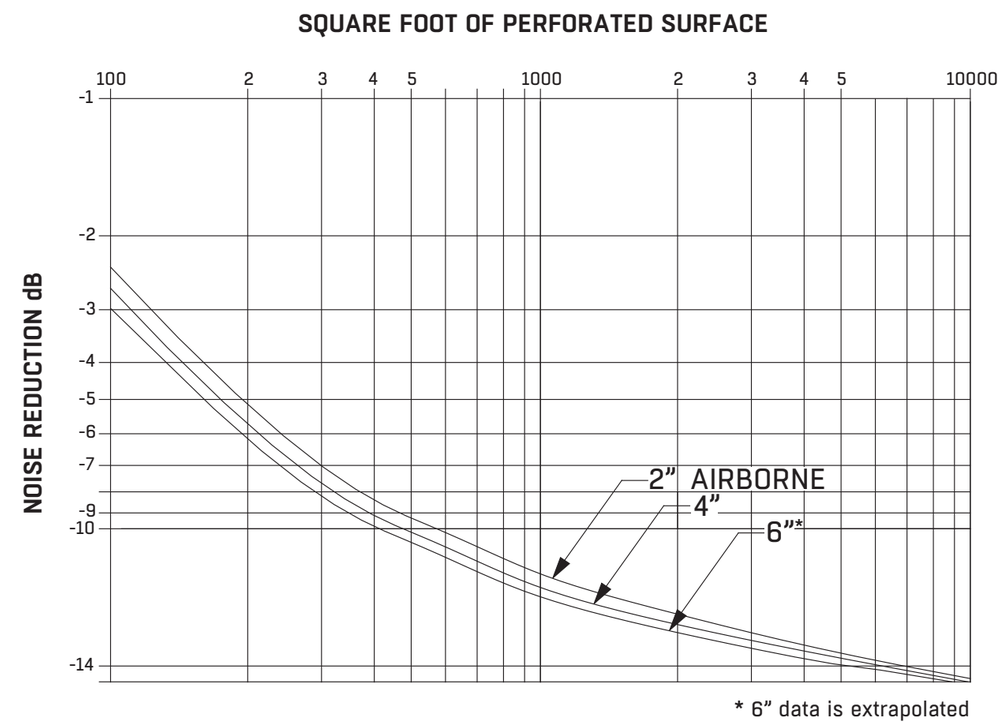

Plenum Acoustics- Airborne Noise Reduction

1. Noise reduction is per square foot of perforated area. The perforated area from the fan discharge to the supply air opening is effective area of absorption of the supply system.
2. Perforated area from the fan intake to the return air opening is the effective area of absorption for the return system.
3. Area not defined by either notes 1 and 2 are not to be used in calculating dB reduction.

"Our team selected FläktGroup® SEMCO® enclosures because they offered a superior product at a competitive price."

- Gary Lovewell, Project Manager

STRUCTURAL INTEGRITY

Maximum Unsupported Perforated Panel Span (in inches)

STATIC PRESSURE	2" ROOF		2" WALL		4" ROOF		4" WALL		6" ROOF		6" WALL	
	(+) POS	(-) NEG	(+) POS	(-) NEG	(+) POS	(-) NEG	(+) POS	(-) NEG	(+) POS	(-) NEG	(+) POS	(-) NEG
0"	192	192	192	192	192	192	192	192	192	192	192	192
2"	159	144	136	160	192	192	192	192	192	192	192	192
4"	115	120	108	127	192	192	188	192	192	192	192	192
6"	98	107	94	111	172	175	163	183	192	192	192	192
8"	88	98	85	101	147	161	141	166	186	192	177	192
10"	78	91	76	93	130	150	126	154	165	192	158	192

Span based on maximum deflection of L/240

Maximum Unsupported Solid Panel Span (in inches)

STATIC PRESSURE	2" ROOF		2" WALL		4" ROOF		4" WALL		6" ROOF		6" WALL	
	(+) POS	(-) NEG	(+) POS	(-) NEG	(+) POS	(-) NEG	(+) POS	(-) NEG	(+) POS	(-) NEG	(+) POS	(-) NEG
0"	192	192	192	192	192	192	192	192	192	192	192	192
2"	187	153	155	173	192	192	192	192	192	192	192	192
4"	133	129	123	137	192	192	192	192	192	192	192	192
6"	113	115	107	120	192	188	182	192	192	192	192	192
8"	101	105	97	109	173	173	165	180	192	192	192	192
10"	93	98	90	101	155	162	149	168	192	192	189	192

Span based on maximum deflection of L/240

PANEL JOINT CONDENSATION

Ambient design conditions must fall below the inside temperature curves to prevent condensation at panel joints.

2" Panels

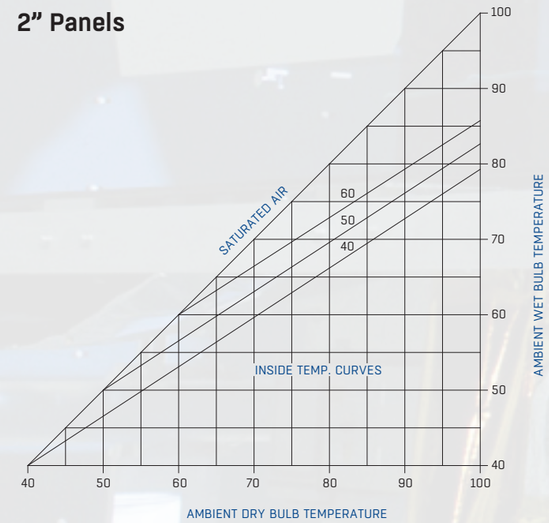

4" Panels

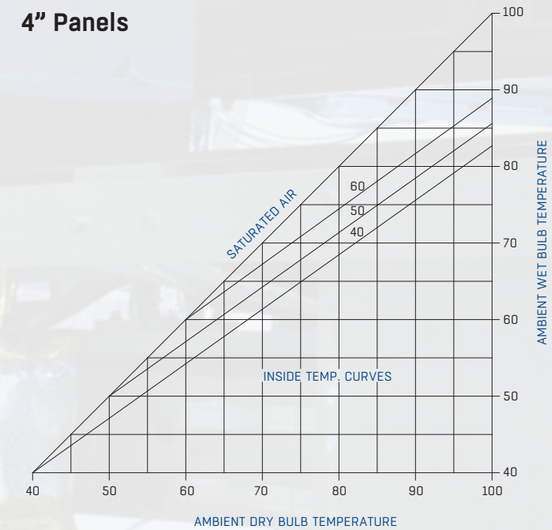

6" Panels

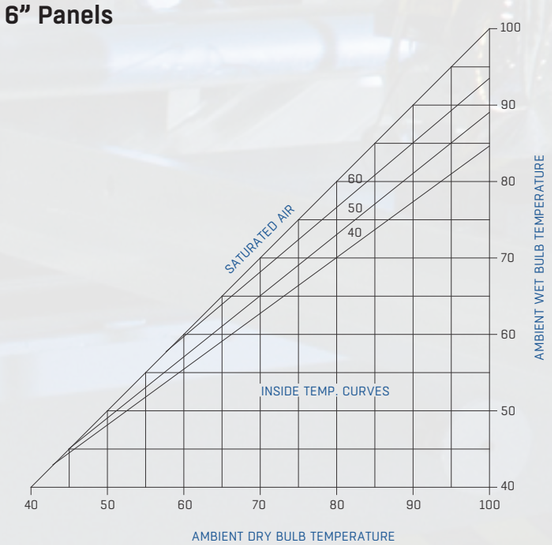

THERMAL PERFORMANCE

STANDARD PANEL CONSTRUCTION	2" PANEL	4" PANEL	6" PANEL
Panel U-Factor	0.10	0.06	0.05
Joint Performance Factor	0.53	0.63	0.67

Under very humid conditions the most probable location that condensation will occur is at the panel joint. See the *Application Guide* on page 9, for additional panel constructions.

OST = TI + [JTF x (TO - TI)]
OST = Outside Skin Temperature
TI=Temperature Inside
TO=Temperature Outside
JTF = Joint Factor

The outside skin will condense if the temperature is less than the space dewpoint.

STRUCTURAL
LOAD CONVERSIONS

Outdoor enclosures must be looked at differently than indoor enclosures. Units will be subject to structural design criteria when environmental conditions such as snow and/or wind load are considered. When these loads exist they must be considered in addition to the internal pressure. This chart expresses the equivalent pressure in water gauge with regards to wind, snow, and live loads.

Refer to ASCE 7-88 for an expanded discussion on "Minimum Design Loads for Buildings and Other Structures" for additional information such as seismic loads. Always refer to the local building codes for more specific information on local requirements.

PRESSURE (W.G.)	WIND LOAD (M.P.H.)	SNOW LOAD (LBS. PER SQ. FT.)	LIVE LOAD* (LBS. PER SQ. FT.)
0.5	30	3	3
1.0	40	5	5
1.5	50	8	8
2.0	60	10	10
3.0	80	16	16
4.0	90	21	21
5.0	100	26	26
6.0	110	31	31
7.0	120	36	36
8.0	130	42	42
9.0	135	47	47
10.0	140	52	52
11.0	150	57	57

*Live load converted to static pressure equals 1" w.g. for each 5.2 lbs.

This information is not intended to be the primary source of your structural design. For additional information on structural design contact your FläktGroup SEMCO Regional Sales Manager.

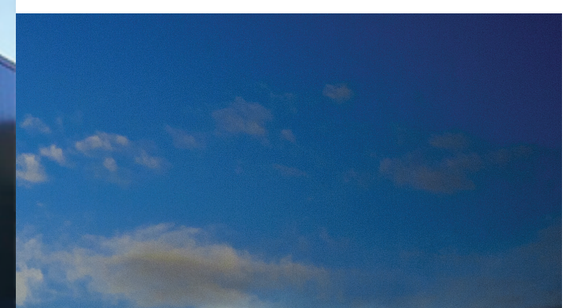

POSITIVE AND NEGATIVE
AIR PRESSURE

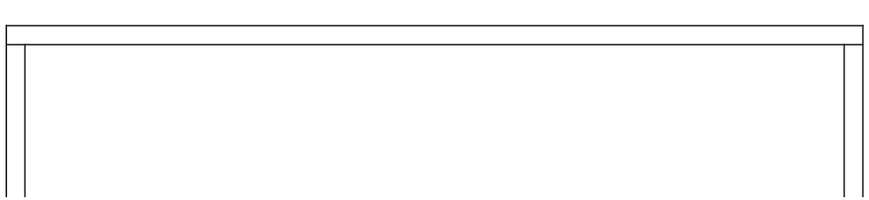

ACOUSTIC/THERMAL PANEL SPECIFICATION

Acoustical enclosures shall be of dual wall tongue and groove panel construction finished and installed as located and sized on the contract drawings. The use of contractor's shop constructed enclosures shall not be allowed.

Individual wall and roof panels shall be (2", 4"or 6"thick)* constructed of 18 gauge, galvanized, solid exterior skin and a 22 gauge, galvanized, perforated interior liner with minimum 18 gauge, galvanized longitudinal stiffeners spaced a maximum of 16" apart. Floor panels shall be (2", 4", or 6" thick)* constructed of 16 gauge, galvanized, solid upper skin and 22 gauge, galvanized, solid lower skin for floor panels (intermediate floor panels shall have perforated lower skins where applicable). Spacing of internal longitudinal stiffeners shall not exceed 8". Panels shall have a maximum width of 45 1/2. Panel spans up to 16'-0" shall be furnished as one piece. Stiffeners shall have a depth equal to the panel thickness and be connected to both the inner and outer skin so as to provide an integral structural reinforcement within the panel. Panel interior shall be completely filled with a minimum three pound per cubic foot density glass fiber insulation. Insulation shall be corrosion and moisture resistant, and rated noncombustible as defined by NFPA Standard 220 when tested in accordance with ASTM E136. Surface burning characteristics per ASTM E84 shall be:

Flame Spread - 15 Smoke Developed - 0

Male edge of panel shall be metal enclosed and filled with insulation. Because of the male-female joint, panels contain no insulation voids in joints. Manufacturers furnishing individual panels with an open male channel shall fill the open channel with insulation as heretofore specified, which shall be attached permanently to the panel.

OPENINGS: The panel manufacturer shall provide all duct and fan openings. All piping and conduit penetrations shall be field located, cut, and sealed.

Access doors shall be 24" x 66" except as noted on drawings and shall be of the pre-hung type constructed of 18 gauge, galvanized, all welded door frame and 18 gauge, galvanized, solid exterior and interior skins enclosing insulation as specified for panels. Doors shall be provided with a minimum of two Kason 1061 hinges and two FläktGroup® SEMCO® door latches operable from both sides of the door. Air seals suitable to provide airtight seal shall be provided between door and frame. Door swing shall be such as to open against system pressures. Each door, when required, shall have a 12" x 12" double pane safety glass viewing window.

In addition to panels, sufficient trim of a minimum of 16 gauge galvanized shall be provided in standard lengths to erect casing leaving no exposed panel edges. Base channel shall have 9/16" holes pre-punched 24" on center for securing with approved fasteners to curb or pad. Sufficient panel sealant and self-tapping fasteners shall be provided to erect enclosure per manufacturer's instructions. Panel sealant shall be a gray colored, single component, non-sag, nonstaining, permanently flexible, gunnable butyl rubber of the highest quality and conforming to federal specification TT-S-001657 for "sealing compounds, single component, butyl rubber base, solvent release type." Sealant for door frame to panels applications shall be a clear colored silicone rubber sealant conforming to the provisions of MIL-A- 46106A Type 1 and certified to federal specification II-S-001543A.

Structural integrity of the completed enclosure shall provide for maximum panel deflections of 1/240 of free span when enclosure is subjected to a test pressure of 10" water column without the use of any fasteners at panel joints. Data used to determine structural performance shall have been the result of independent testing of a representative sample of the manufacturer's regular production, which shall have been certified by the independent tester. Panels shall have been tested by subjecting them to an air pressure simulating the loadings imposed under normal operation. Panel tests as a result of application to artificial loads unevenly distributed over the entire panel surface will not be accepted.

Structural steel required to limit the deflection herein specified shall be designed and furnished by the enclosure manufacturer and installed by the contractor. All equipment supports shall be designed, furnished and installed by the contractor.

Enclosure manufacturer shall have published data equal in all respects to enclosures manufactured by FläktGroup SEMCO. Performance data certified by an industry recognized independent acoustical testing laboratory shall be submitted to the engineer to verify that the completed enclosure will meet or exceed the requirements in this specification. Such data shall have been the result of certified independent testing of a representative sample of the manufacturer's regular product in accordance with applicable provisions of the American Society for Testing and Materials Procedures (423-77) and (E90-70). Performance of the enclosure shall not be impaired through prolonged exposure to noise, vibration, pressure or dampness.

For the CSI MasterFormat version of this specification, please call your local representative or visit our website at www.semcohvac.com.

2" PANEL*							
Octave Band Frequency (Hz)	**125**	**250**	**500**	**1000**	**2000**	**4000**	
Absorption Coefficient	0.58	0.93	1.16	1.18	1.15	1.12	1.10 NRC
Transmission Loss	26	29	33	44	52	60	38 STC
4" PANEL*							
Octave Band Frequency (Hz)	**125**	**250**	**500**	**1000**	**2000**	**4000**	
Absorption Coefficient	0.7	1.14	1.18	1.14	1.14	1.16	1.15 NRC
Transmission Loss	26	32	38	51	60	67	43 STC
6" PANEL*							
Octave Band Frequency (Hz)	**125**	**250**	**500**	**1000**	**2000**	**4000**	
Absorption Coefficient	0.82	1.14	1.2	1.15	1.15	1.2	1.16 NRC
Transmission Loss	28	38	44	53	62	58	49 STC

* Thermal performance of panels shall provide for a U-factor of 0.10 for 2" panels and 0.06 for 4" panels or .05 for 6" panels.

WWW.SEMCOHVAC.COM / AT-PANEL / 20231004

FläktGroup® SEMCO® delivers smart, energy-efficient, air-quality solutions to support every building application. We offer our customers innovative technologies, high-quality products and outstanding performance supported by more than fifty years of accumulated industry experience. The broadest offering on the market and a strong market presence in 65 countries worldwide guarantees that we are always by your side, ready to deliver: Excellence in Solutions.

FläktGroup® SEMCO®
Corporate Headquarters
1800 East Pointe Drive
Columbia, Missouri 65201 USA

573.443.1481

sales.semco@flaktgroup.com

To learn more about FläktGroup® SEMCO® offerings and to contact your nearest representative please visit **www.semcohvac.com**

© Copyright 2023 SEMCO Duct & Acoustical Products, Inc. All Rights Reserved. SEMCO embraces a policy of continuous development and improvement, the right is reserved to supply products which may differ from those illustrated and described in this publication. Specifications are subject to change without further notice. Any FläktGroup SEMCO purchase is subject to FläktGroup SEMCO standard terms and conditions. Certified dimensions will be supplied upon request on receipt of order. SEMCO is a registered Trademark of SEMCO LLC. Other trademarks and logos in this publication may be property of SEMCO, LLC, its subsidiaries or any of its related companies and/or other organizations or individuals.