FläktGroup®

SEMCO®

ASCENDANT™

OWNER'S MANUAL

TABLE OF CONTENTS

Introduction 1
The FläktGroup® SEMCO® System 1
Four Steps to Fresh, Cool Air During the Cooling Season 2
System Installation 3
- Lifting 3
- Receiving 3
- Inspection 4
- Storage 4
- Installation 5
- Mounting Details, Curb Support 9
- Mounting Details, Grid or Pad Support 10

Active Desiccant Wheel 11
EC Fans 11
Plenum Fans 12
Coils 13
Dampers 13
Gas Burners 14
Humidifier 14
Ultraviolet Lights 14
Bipolar Ionization System 15
Air Filters 15
Unit Control 17
- Sequence of Operation 17
- Programming Parameters 18

Troubleshooting 20
Maintenance 22

© SEMCO 2015-2024. All rights reserved.

The information in this owner's manual is furnished for informational use only, is subject to change without notice, and should not be construed as a commitment by SEMCO LLC. SEMCO LLC assumes no responsibility for any errors that may appear in this owner's manual.

No part of this publication may be reproduced, stored in a retrieval system or transmitted, in any form or by any means, electronic, mechanical, recording, or otherwise, without the prior written permission of SEMCO LLC.

© SEMCO LLC 2024 All Rights Reserved. SEMCO and the SEMCO logo are registered Trademarks of SEMCO LLC.

This appliance is not intended for use by persons (including children) with reduced physical, sensory, or mental capabilities, or lack of experience and knowledge, unless they have been given supervision or instruction concerning use of the appliance by a person responsible for their safety.

Children should be supervised to ensure that they do not play with the appliance.

INTRODUCTION

This manual describes how to erect, store, clean and maintain a FläktGroup® SEMCO® Ascendant® Series Active Desiccant System.

Each section provides information to guide the installation and maintenance of all components that may be included in the system. However, some individuals may desire more information about one or more items of equipment installed in the system. If so, consult the manufacturer's manual that accompanies the equipment or is included with our submittal.

It should also be noted that a section or sections of this manual might not apply to your system; for example, it may not include a chilled water or steam coil. The manual has been prepared to cover the basic system as well common optional components that may be included in an Ascendant Series Active Desiccant System.

THE FLÄKTGROUP® SEMCO® SYSTEM

The Ascendant Series is a conventional cooling – active desiccant hybrid system. Performance is optimized to deliver and control low dew point air while minimizing energy input. The system is configurable as a dedicated outdoor air system (DOAS) or a recirculated air system.

The heart of this system is a technologically advanced desiccant wheel. This wheel is constructed of inorganic and incombustible materials in a honeycomb pattern to lower pressure drop, thereby saving fan energy.

The Ascendant system processes outdoor and/or return air streams to a moderate leaving coil temperature condition (when needed), thereby delivering saturated air to the active desiccant wheel which promotes highly efficient moisture adsorption, further depressing the supply air humidity content to very low dew points.

By employing moderate chilled water or refrigerant temperatures, the efficiency of the cooling system employed is high.

An integral modulating bypass damper allows the cool, moderately dry air leaving the cooling coil to be mixed with the appropriate quantity of warm, very dry air leaving the dehumidification wheel to deliver the required supply air dew point. If tight temperature control is also required, a small sensible only post cooling coil is employed.

Regeneration of the desiccant wheel is also achieved with high energy efficiency. A typical regeneration airflow quantity is only 20% - 40% of the supply airflow volume. Only moderate regeneration temperatures (140˚F to a maximum of 200˚F.) are required, allowing the use of hot water, steam, direct or indirect fired gas, or electric heat.

For applications where an exhaust air stream is available (i.e. hospital operating theaters) preconditioning the outdoor air with FläktGroup SEMCO total energy recovery is highly recommended since it substantially increases overall system energy efficiency and substantially reduces pre-cooling input requirements. It also provides valuable winter season preheat and humidification.

On the supply air side of the wheel, a chilled water or direct expansion coil provides cool, moist air to the wheel. The wheel adsorbs the moisture, producing dry supply air. On the regeneration side of the wheel, warm, dry air enters the wheel, which desorbs the moisture allowing it to be exhausted from the system

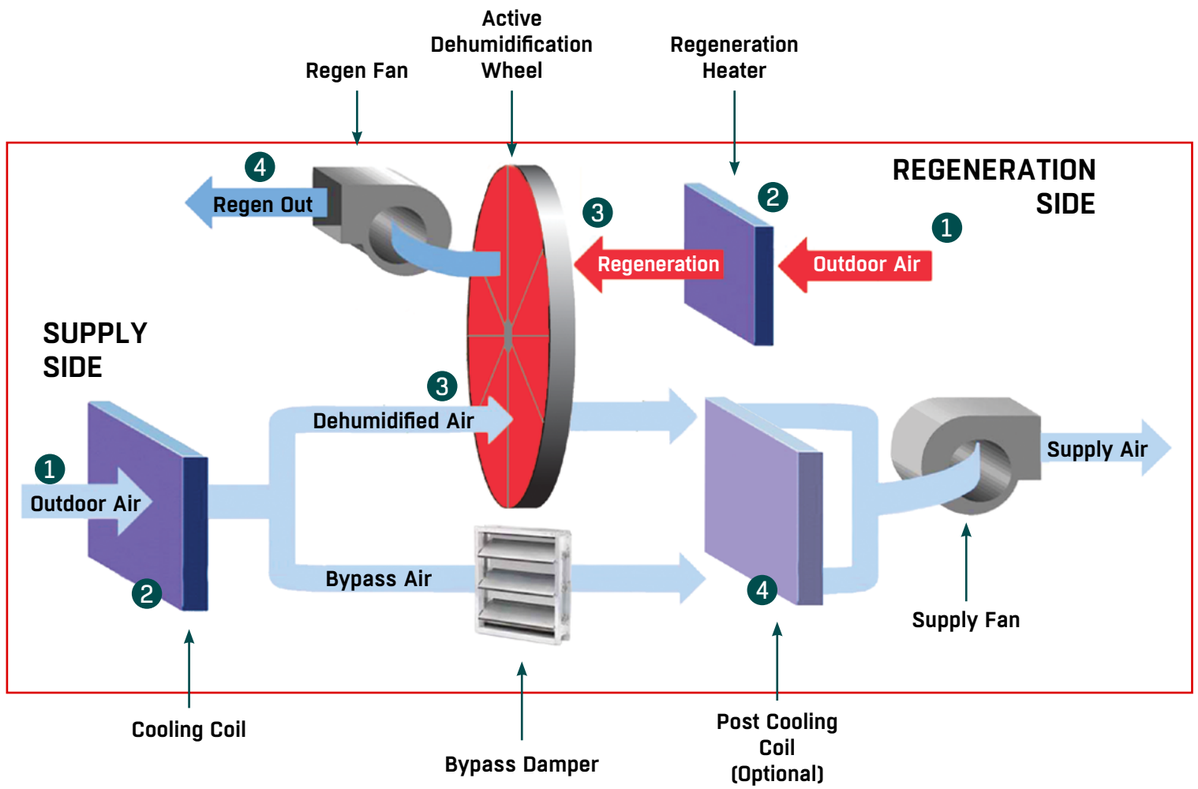

FOUR STEPS TO FRESH, COOL AIR DURING THE COOLING SEASON:

	SUPPLY SIDE	REGENERATION SIDE
STEP 1	Hot, humid outside air is drawn into the Ascendant® system passing through pre-filters before entering conditioning components.	Hot, humid outside air is drawn into the Ascendant system passing through pre-filters before entering conditioning components.
STEP 2	Outside air is cooled and dehumidified before entering the Active Desiccant wheel.	Outside air is heated to desired temperature to lower the relative humidity of the air before entering the Active Desiccant wheel.
STEP 3	The moisture in the air is adsorbed by the desiccant producing dry air. A modulating damper allows a portion of the supply air to bypass the wheel.	The adsorbed moisture is desorbed by heated air regenerating the wheel's ability to remove moisture.
STEP 4	(OPTIONAL) Supply air can be cooled using post-cooling coils and further filtered with high efficiency or HEPA filters.	Warm, humidified regeneration air is exhausted from system.

SYSTEM INSTALLATION

How to handle the system upon delivery to the project site.

LIFTING

To off load each of the system's modules, lift only with the lugs located at the base of each module (**FIGURE 1**). Do NOT lift with a forklift. Spreader bars must be used to hoist sections to avoid damaging the enclosure (**FIGURE 2**).

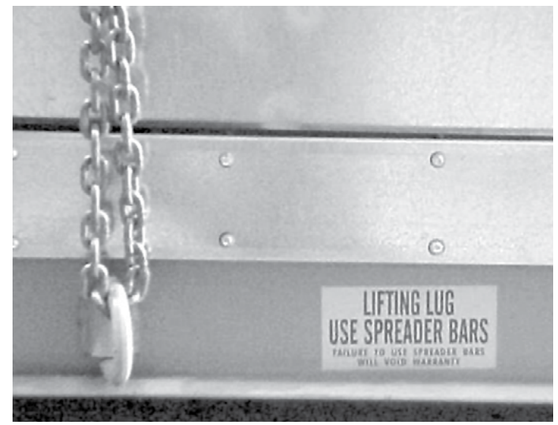

FIGURE 1. Lift modules only with lugs located at the base of each module. Do not use a forklift.

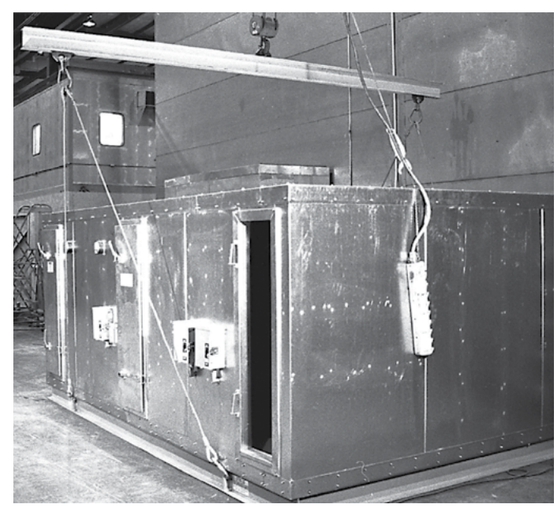

FIGURE 2. Spreader bars must be used for hoisting modules to avoid damaging the enclosure.

Chokers need to be adjustable so that the unit is level when it is picked up and, more importantly, set down. **WHEN SETTING THE UNIT DOWN, A LEVELING BLOCK MUST BE PLACED UNDERNEATH EACH LIFTING POINT TO PREVENT DEFLECTION.** Setting the unit down on one corner could cause the unit to rack. Lever chain pullers are useful for this purpose.

RECEIVING

1) A packing list is supplied with each shipped system (See **FIGURE 3**). The list should be compared with arriving shipments to ensure that all modules and equipment have been delivered in good condition. Visible damage should be noted on the trucker's bill of lading when receiving the unit.

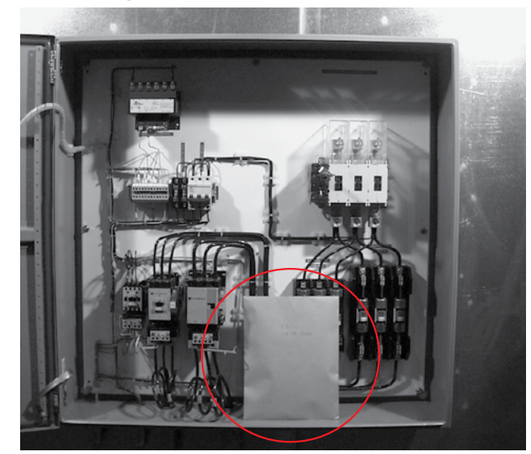

FIGURE 3. An envelope with the packing list and other pertinent information is found inside the electrical box.

2) Prior to leaving the plant, each system has been tested. You will find the quality assurance label on the inside of the electric box cover.

3) If the modules are to be stored for more than three days prior to installation, a visual inspection of all equipment is necessary. Report missing or damaged equipment to FläktGroup SEMCO immediately. Freight claims are difficult to justify long after delivery has been completed. (If the modules are to be stored, see STORAGE on PAGE 4.

4) Modules accumulate dust, dirt and corrosive matter (like salt) during shipment to the installation, site on open trailers, and are

exposed to still more grime on the construction site. Therefore, it is imperative that the exterior of each module be washed down with soap and water soon after it arrives. Abrasives and solvents should not be used without first consulting FläktGroup SEMCO.

4) The interior of each module should also be cleaned throughly and all equipment should be lubricated before storing or beginning operation.

5) See other sections for specific lubrication instructions.

INSPECTION

In addition to inspecting modules and equipment visually for possible shipping damage, be sure to consult "Inspection" instructions described later in this manual for each optional component.

STORAGE

If the system, or parts thereof, must be stored before complete of full installation, indoor storage is preferred. If not possible, modules should be located on a hard surface with adequate drainage so that water cannot accumulate under the modules. A solid paved surface would be appropriate. Modules must be stored on leveling blocks or timbers that raise modules at least four inches above the ground. **A BLOCK MUST BE PLACED UNDERNEATH EACH LIFTING POINT TO PREVENT DEFLECTION.**

If stored indoors, modules should be protected from damage. If stored outdoors, modules must be covered with well-anchored canvas tarps. Heavy-mil plastic tarps should be used with caution as they can trap moisture against the unit.

MOISTURE MUST NOT BE ALLOWED TO ENTER THE MODULES. Whether stored indoors or outdoors, all openings must be closed tightly and piping penetrations must be capped. However, drain connections should be left open.

As noted previously, modules must be washed to remove corrosive materials and dirt before storage.

During the storage period, modules should be opened and inspected every 30 days. Fans must be inspected and rotated a few times by hand and stopped in a position other than the original position. Fans should also be lubricated as prescribed on the fan label.

If moisture is found in any module, it must be removed immediately. The source of the moisture must be determined and corrected immediately.

During storage, modules should not be stacked on top of each other.

Boxes containing bolts, gaskets and other items should be stored inside the modules (See **FIGURE 4**).

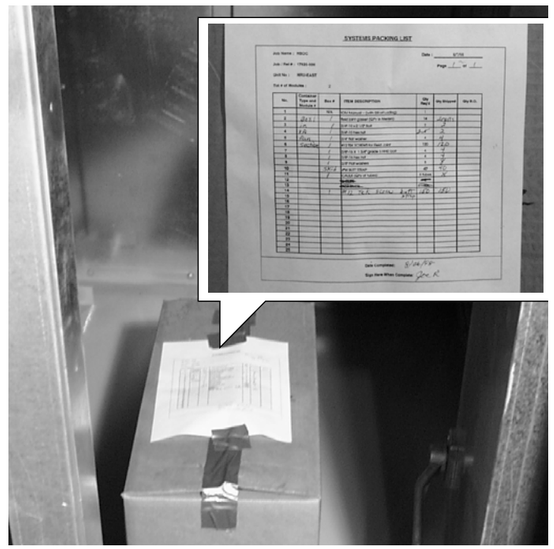

FIGURE 4. All gaskets, bolts, and other items required for installation are shipped in a box located in the supply air compartment. On top of the box you will find a packing list.

INSTALLATION

If the unit is equipped with a UV-C germicidal lamp system; **READ THE UV MANUFACTURER'S OWNER'S MANUAL BEFORE INSTALLING THE ELITE AHU UNIT.** The manufacturer's owner's manual is located with the unit's ship loose items.

- The unit **MUST** be de-energized prior to maintenance or cleaning of the UV light system.
- Reference cleaning instructions in the UV light IOM.
- UV lights that have been damaged must not be operated. Unintended use of the unit or damage to the casing may result in the escape of dangerous UV-C radiation. UV-C radiation may cause harm to the eyes and skin.
- Doors and access panels bearing the ultraviolet radiation hazard symbol, which may have UV-C spectral irradiance greater than 1.7 uW/cm^2 are provided with a safety interlock switch to interrupt power to the UV-C lamps for safety. **DO NOT** override the interlock switch.
- Disconnect power before opening doors or access panels bearing the ultraviolet radiation hazard symbol to perform inspection or maintenance.
- UV-C barriers bearing the ultraviolet radiation hazard symbol **SHOULD NOT BE REMOVED. DO NOT** operate UV-C lamps outside of the unit.
- Reference the unit submittal for UV-C lamp models and part numbers.

1) Prepare the installation site by cleaning it of all debris. Supports, which the modules will be installed on, should be level. The unit base is designed either for mounting on a concrete pad or onto a roof curb (See **PAGE 10**).

2) Consult drawings and submittal provided to determine the location of each module. Plan to lift modules in the order required for your Installation and within the limitations of your lifting equipment (see **LIFTING** on **PAGE 3**).

3) Adjoining ends of modules are covered with plywood and/or plastic sheets during transport. This must be removed prior to hoisting the modules in place. (See **FIGURE 6**).If installation

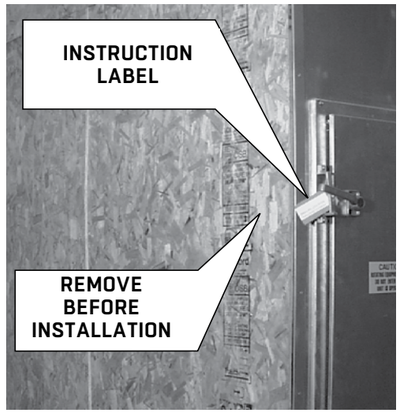

FIGURE 5.
Module sides which are to be joined at time of installation are covered with plywood and/or plastic sheets for protection during transport.

Throughout the unit you will find instruction labels indicating which steps MUST be performed for proper installation.

4) Remove shipping restraints at roof joint (not shown).

5) Hoist the first module in place. Spreader bars and hoisting lugs must be used on each module for hoisting. Do not use forklifts. (See **FIGURES 1** and **2** on **PAGE 3**).

6) After positioning the module correctly, install continuous gasket material on field joint flange as indicated in **FIGURE 6.**

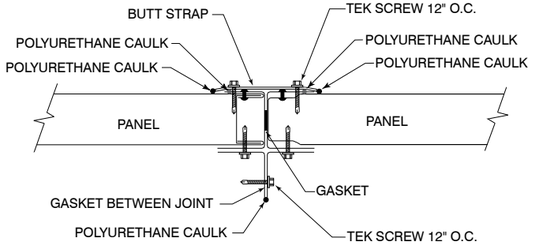

FIGURE 6. Detail of field joint located on side.

7) Hoist the second module by its lifting lugs (continue to use spreader bars), and position it close to the first module. After aligning with the first module, move the second module against the first module.

8) Insert bolts that join the first two modules in the unit base and tighten. The large bolts in the unit base may be used to help pull the two modules against each other. Do not use any of the internal field joints to pull the units together. (See **FIGURE 7**).

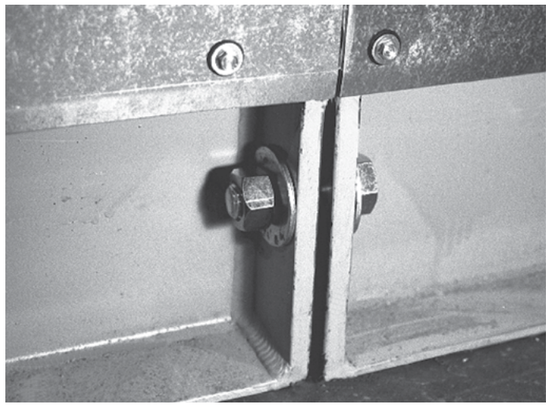

FIGURE 7. Field joint located on base. Use only these bolts to pull the modules together!

9) Verify that the two modules are straight, square and level. Use metal shims if necessary to level.

10) Hoist and set succeeding modules as described in **STEPS 5-7**.

11) If installation requires that some modules be placed on top of base or bottom modules, be sure to install continuous gaskets between upper and lower modules as indicated in drawings and submittals.

12) Do not torque connecting bolts until all upper modules are installed. Experience suggests installing bolts in the following manner. First, attach bolts that join the centers of connecting modules. Then work outward from the center and attach remaining bolts, which will assure proper alignment. Bolts should only be tightened by hand until all upper modules are in place. Then they should be torqued to 25 ft-lbs.

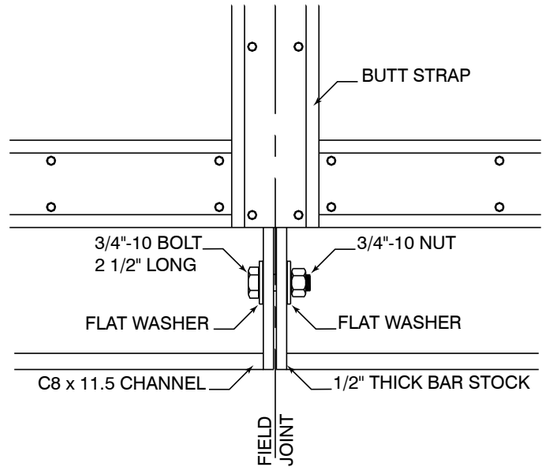

FIGURE 8. Detailed drawing of field joint.

FIGURE 9. Field joint located at floor.

13) Complete field joint assembly by applying polyurethane caulk to the exterior of the joint and then cover with butt strap as shown in **FIGURE 6** (on PAGE 5), **FIGURE 8** and **FIGURE 9**.

14) Modules produced for outdoor locations are manufactured with a galvanized steel standing seam roof. A section of roof is shipped loose for field installation at each field job.

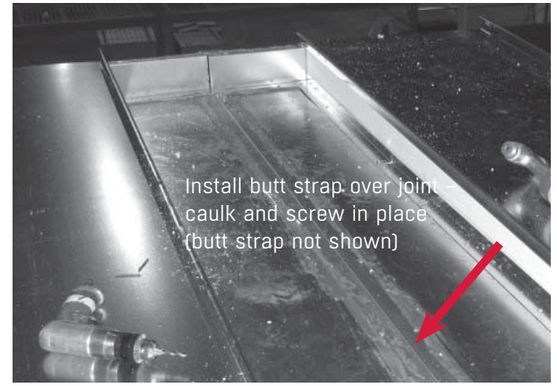

FIGURE 10

15) Apply polyurethane caulk along the underside of the roof butt strap and center over the joint between the two modules. Using #12 TEK screws at approximately 12" centers, screw the butt strap to the roof.

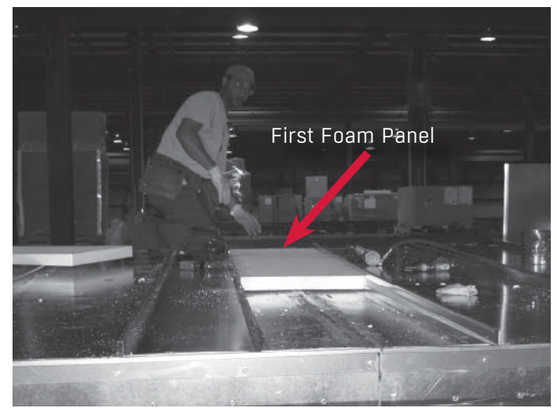

FIGURE 11

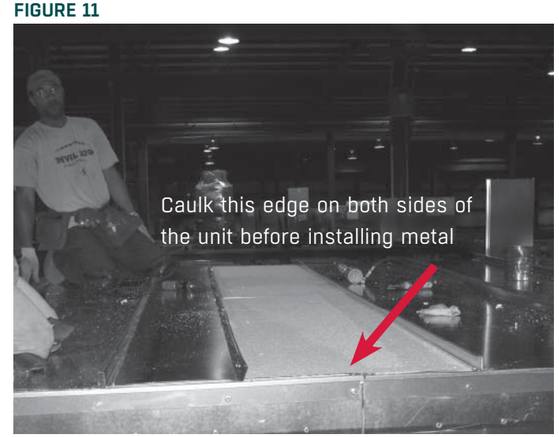

FIGURE 12

16) Apply caulk at high and low point of roof and add first foam panel.

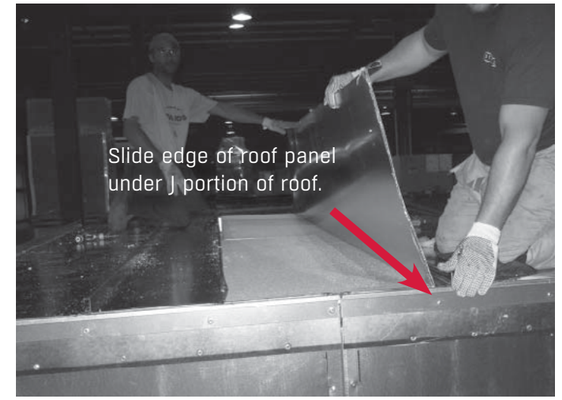

FIGURE 13

17) Apply second foam panel. (See **FIGURE 14** picture for caulking instructions).

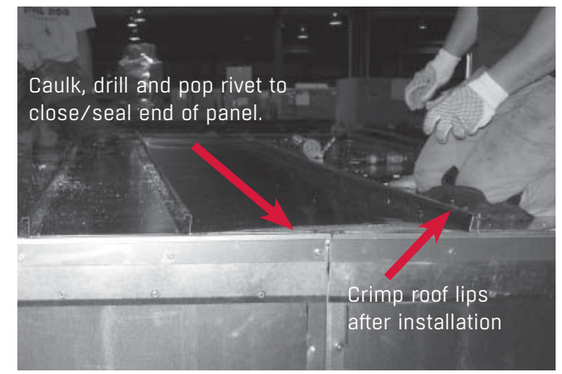

FIGURE 14

18) Insert one edge of roof panel as shown and rotate into place (See **FIGURE 13**).

19) Crimp roof lips with crimping tool (See **FIGURE 14**).

20) Finish high side of roof with rain cap. Screw in place similar to factory cap.

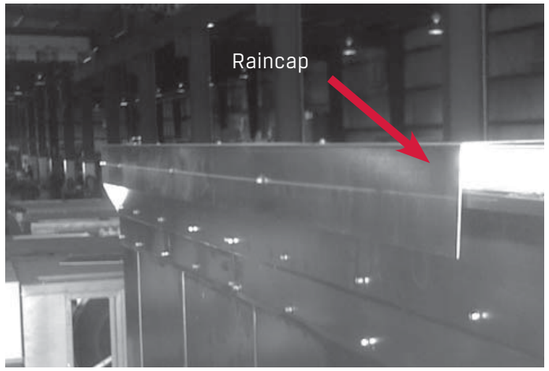

FIGURE 15

21) Holes for conduit, piping, etc., are normally precut in module panels at the factory. However, if it is necessary to change the location of a hole or to cut a new one, these guidelines must be observed:

- Every hole represents a potential leak. Avoid adding new holes to the enclosure if possible.
- If it is necessary to add a new hole or to move the location of a hole already in the unit, select a location as close as possible to hookup inside the enclosure.
- Cut holes through panels. **DO NOT** cut through structural members.

22) Removable panels are furnished for large items such as coils. Adequate service space in front of these panels should be provided in case the item or items will have to be removed at some future time (See **FIGURE 16**).

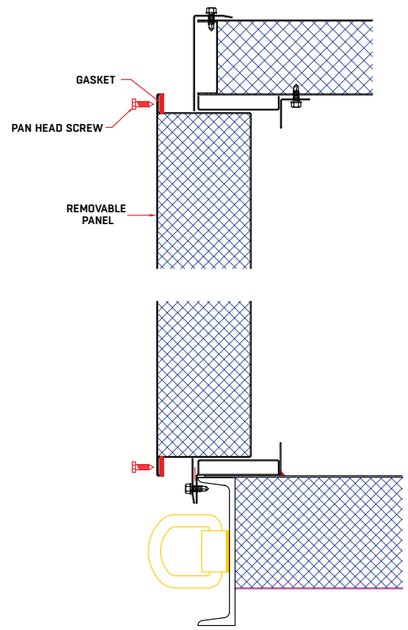

FIGURE 16. Detailed drawing of removable panel installation.

23) Complete electrical and control connections across field joints. Use coded wires or terminal strips in junction boxes and the flex connections provided. Wiring diagrams are attached to the inside of the electrical panel (See **FIGURE 17**).

FIGURE 17. Inside the electrical box cover you will find a wiring schematic, and the quality assurance label.

24) Complete service connections to piping and power. Be certain to check specific requirements for electrical power to the energy recovery unit, fans, dampers and other electrical devices.

25) If hoods do not come pre-attached, after installing the unit, attach the outdoor air hood and the exhaust hood working from top to bottom.

26) Align the top hood assembly with the top of the unit opening such that the top flange is immediately at the top of the opening. Align the hood width wise, so as to avoid existing screw heads on the unit enclosure. **NOTE:** The hood may not necessarily be centered on the opening width.

27) Secure hoods to the unit using screws across the top flange through provided mounting holes. (See **FIGURE 17**)

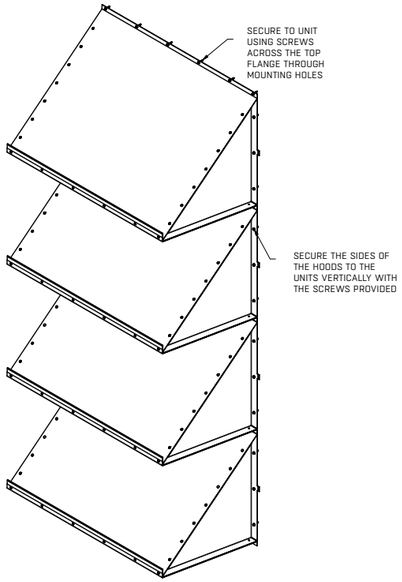

FIGURE 17.

28) Position the next hood — align the holes in the bottom of flange of the upper hood with the top flange of the lower hood, ensuring that the lower hood laps **BEHIND** the upper hood as shown in **FIGURE 18**. Secure overlapping flanges at sides to the unit using screws through provided mounting holes. (See **FIGURE 19**)

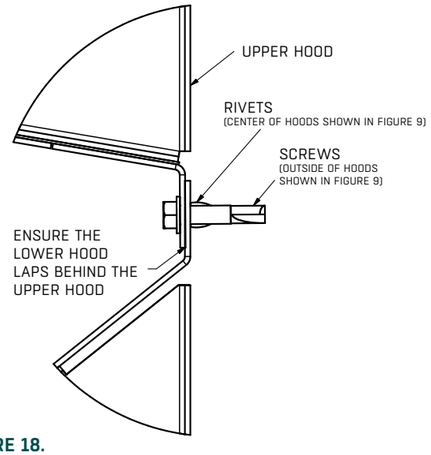

FIGURE 18.

29) Secure the sides of the hoods vertically with the provided screws.

30) Rivet the center mating flanges of the hoods together in the opening using the aligned holes. (See **FIGURE 19**)

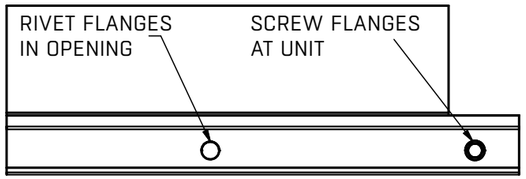

FIGURE 19.

UV-C LAMP INSTALLATION — OPTIONAL

WARNING: BEFORE INSTALLING UV-C LAMPS, SWITCH OFF ALL POWER TO THE ELITEPRO AHU UNIT.

1) Consult all applicable electrical codes before installing. Check fixture labels for correct power requirements and supply the correct voltage from a suitable, protected (fused or breaker), and a grounded power source.

CAUTION: USING VOLTAGES OTHER THAN THOSE LISTED ON VOLTAGE LABELS WILL VOID PRODUCT WARRANTY AND MAY RESULT IN ADDITIONAL DAMAGE TO THE SYSTEM. FIXTURES SHOULD BE OPERATED CONTINOUSLY TO AVOID GROWTH OF MOLD AND BACTERIA WHEN THE AHU IS SWITCHED OFF.

2) Power must also be switched off at all install access points with a properly rated, SPST interlock switch to completely de-energize the assembly when its install location is accessed.

3) Determine the best location for the UV-C lamps for intended use and access to a power supply.. **NOTE:** The box is a NEMA 2/IP11, recommended for indoor use — it may be mounted inside or outside of the target plenum (outside is preferred). If outdoors, a NEMA 4 box is recommended.

MOUNTING

4) Use the spacing table in **FIGURE 20** to determine the ideal distance between metal lamp clamps. Mount using the provided self-drilling screws. Lamp clamps may be mounted to any surface near the intended UV-C lamp installation site.

NOMINAL LAMP LENGTH	DISTANCE BETWEEN LAMP CLAMPS
33"	APPROXIMATELY 31.5"
61"	APPROXIMATELY 59.5"

FIGURE 20.

CAUTION: ALWAYS TURN THE MAIN POWER SYSTEM OFF, BEFORE CHANGING LAMPS. FAILURE TO DO SO MAY PRODUCE A PROTECTION FAULT WITHIN THE POWER SUPPLY. BEFORE RE-POWERING A FIXTURE, FOLLOW MANUFACTURERS INSTRUCTIONS TO MAKE SURE **ALL** CONNECTIONS (INCLUDING LAMP PINS) ARE TIGHT AND COMPLETE TO AVOID SPARKS, SHORTS OR OVERHEATING. A PROTECTION FAULT REQUIRES A RESET PROCEDURE. TO RESET THE **PROGRAMMED START** FUNCTION OF A POWER SUPPLY, DISCONNECT **ALL** POWER AND POWER WIRES AND WAIT ONE MINUTE. START BY RECONNECTING A/C POWER FIRST AND THEN TURN ON ALL SWITCHES. ALL LAMPS SHOULD LIGHT.

CONNECTING POWER

5) Read the power requirements located on the fixture label — sum up the power requirements for all lamps associated with the installation and install them in accordance of national and local electrical codes. Power should be connected to the fixture via the appropriate conduit.

6) All power-in wire gauge and switch ratings must be in accordance with applicable codes. Power must also be switched at install access points with a properly rated. SPST interlock switch to completely de-energize the assembly when its install location is accessed.

7) Refer to the wiring diagram for the ballast power wiring.

8) **GROUNDING:** ground wires should be wired to provide a grounding lug.

MOUNTING DETAILS, CURB SUPPORT

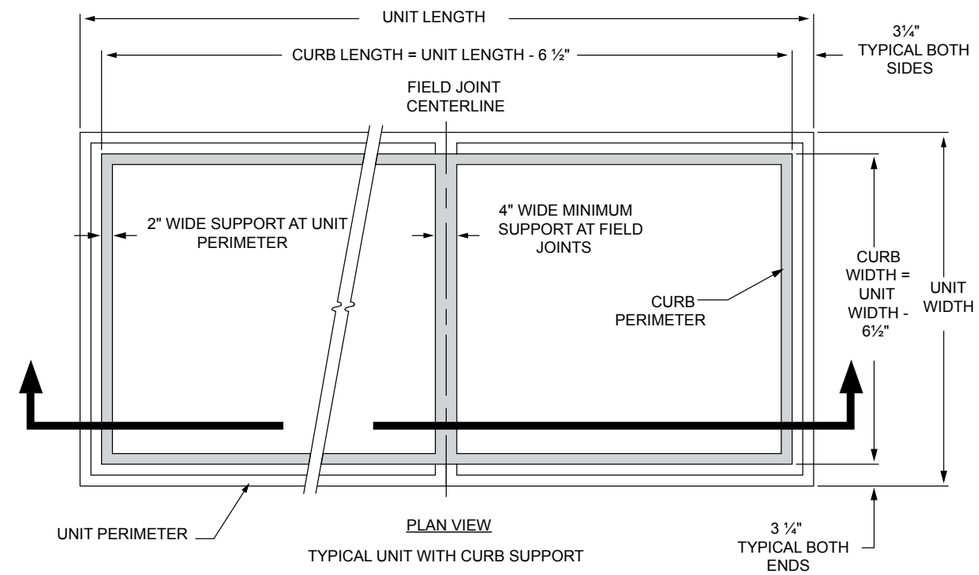

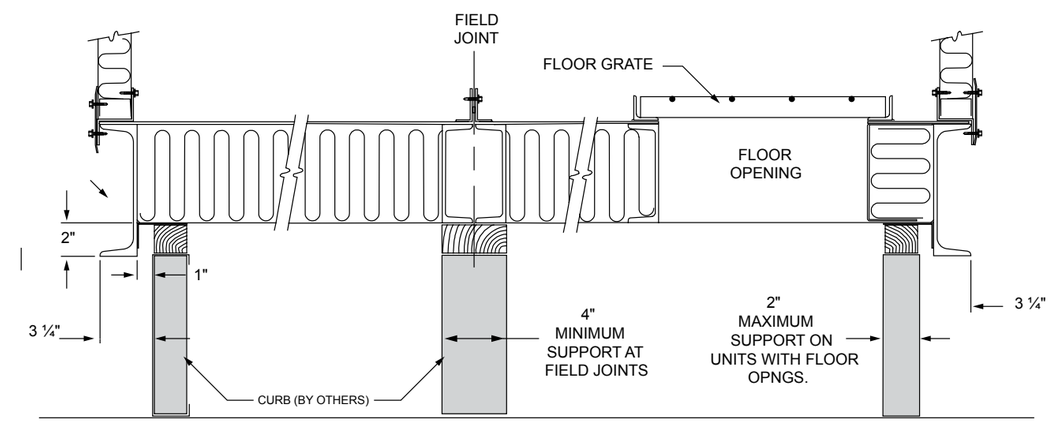

NOTES

1. ROOF CURB SHOULD BE SIZED TO ALLOW UNIT TO HANG OVER CURB.
2. CURB SIZE:
   WIDTH = UNIT WIDTH - 6.5"
   LENGTH = UNIT LENGTH -6.5"
3. UNIT SUPPORT IS REQUIRED AROUND THE ENTIRE PERIMETER AND ALONG BOTH SIDES OF ANY FIELD JOINTS.
4. WHEN UNITS REQUIRE FIELD JOINTS, SUPPORT SHOULD BE LEVEL TO 1/16" BETWEEN FIELD JOINTS.

SECTION

SELF FLASHING UNIT BASE
SHOWING CURB SUPPORT REQUIREMENTS

MOUNTING DETAILS, GRID OR PAD SUPPORT

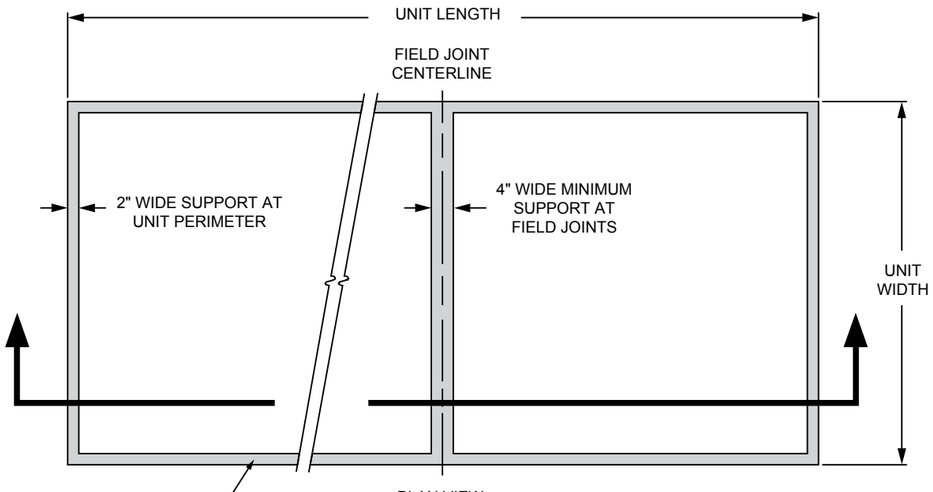

PLAN VIEW

TYPICAL UNIT WITH HOUSEKEEPING PAD OR STRUCTURAL GRID SUPPORT

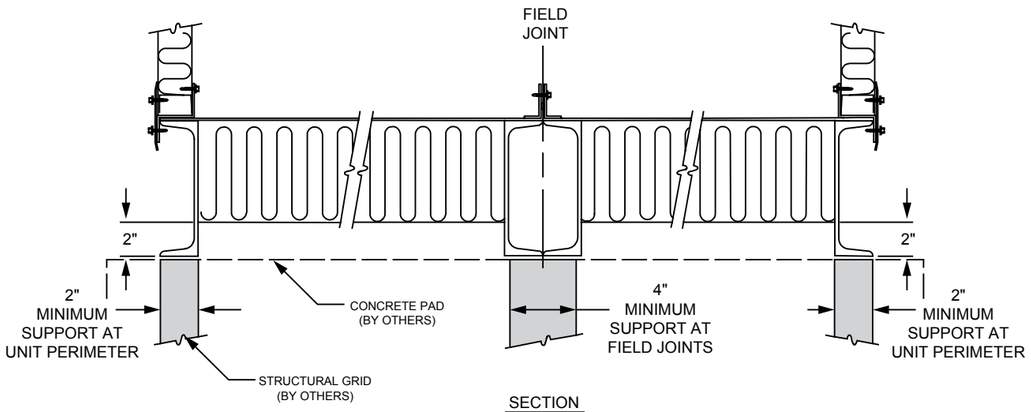

SECTION

UNIT BASE WHEN MOUNTING ON PAD OR STRUCTURAL GRID

NOTES

1. UNIT SUPPORT IS REQUIRED AROUND THE ENTIRE PERIMETER AND ALONG BOTH SIDES OF ANY FIELD JOINTS.
2. WHEN UNITS REQUIRE FIELD JOINTS, SUPPORT SHOULD BE LEVEL TO 1/16" BETWEEN FIELD JOINTS.

ACTIVE DESICCANT WHEEL

All necessary active desiccant wheel components have been installed at the factory and tested for proper operation prior to shipping. Before start up, the following steps should be taken:

1) Pump grease into the two rotor bearing grease fittings using a high quality NLGI No. 2 grease (See **FIGURE 21**).

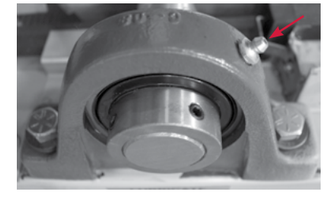

FIGURE 21. Pump grease into two rotor bearing grease points, one on each side of the rotor.

2) Inspect the rotor visually. It should be well centered in its casing and should not tilt in any one direction. If alignment is not suitable, contact FläktGroup SEMCO.

3) Inspect the bearing bolts and the Allen screws on the bearing collar to ensure that all are tight (See **FIGURE 22**). Tighten any loose screws and bolts. The bearing bolts should be torqued to 50 ft-lbs. The bearing set screws should be torqued to 15 ft-lbs.

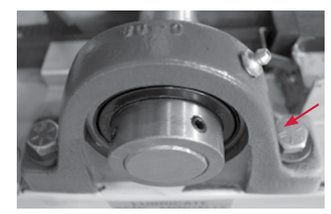

FIGURE 22. Inspect bearing collar to ensure all bolts and screws are tight.

4) The bearing set screws should be checked periodically for tightness. A bearing set screw is located on each side of the rotor (See **FIGURE 23**).

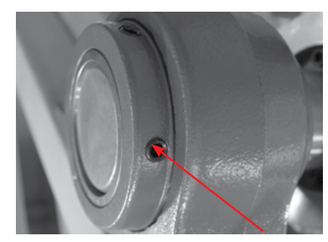

FIGURE 23. The bearing set screws, one on each side of the rotor, should be checked for tightness every six months.

5) The bearing set screws should be torqued to 15 ft-lbs.

6) Upon unit startup observe the wheel in operation and verify that the rotor does not bind. If binding occurs in a new unit, it is usually caused by the seal or freight damage.

EC FANS

All necessary system fans and fan motors are installed at the FläktGroup SEMCO factory. However, before attempting to operate them, a pre-startup inspection is recommended.

1) Make sure all power to the fan motors is off.

2) When checking the fan, be sure to:

A) Check fan bolts and mountings for tightness. Tighten loose screws and bolts.

B) Rotate the impeller by hand; it should turn freely. If not, check for obstructions and contact FläktGroup SEMCO (see the **BACK COVER** for contact info.).

C) Ensure that the fan wheel, drives and fan interiors are clean and free of debris.

3) Check supply fan mountings for the tightness to ensure that they have not loosened during transit or on-site installation. If necessary, tighten loose mountings. Turn motor shaft by hand to verify that it turns freely.

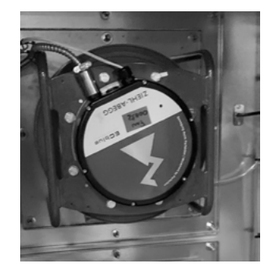

FIGURE 24 Wall mounted EC fan

OPERATION

1) After completing inspection checks on fans, turn power on then off quickly. Power should be on just long enough to start fan rotation.

2) If fans start rotating in the wrong direction (see arrow on the blower) turn off power immediately.

To correct rotation, lock out power to the unit feeder, and switch any two line power wires.

3) Using an amp probe or amp meter, check the actual operating current of the motor to make sure it is not being overloaded or underpowered. The operating current must not exceed the nameplate current.

4) Allow the assembly to run for about an hour. During this time, listen for any unusual sounds. To correct noise problems, see **TROUBLESHOOTING** on **PAGE 20**.

FAN REMOVAL

1) Turn off the power to the unit.

2) Unhook the wiring from the motor.

3) Loosen the nuts holding the fan to the wall. (4-8 nuts)

4) Before removing the nuts and washers, make sure that the fan is supported.

5) Remove the nuts, washers and fan.

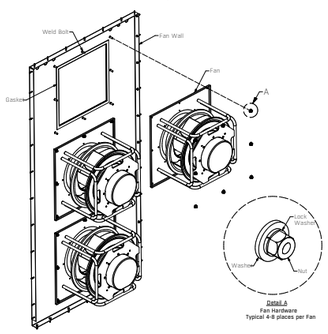

FIGURE 25. EC fan removal

FAN REINSTALLATION

1) Place fan onto weld studs, making sure to support the fan.

2) Install nuts and washers, then tighten.

3) Hook wiring back up per the electrical schematic.

4) Turn the power to the unit back on.

PLENUM FANS

All necessary system fans and fan motors are installed at the FläktGroup SEMCO factory. However, before attempting to operate them, a pre-startup inspection is recommended.

1) Make sure all power to the fan motors is off.

2) Remove wooden blocks and any shipping restraints and discard (See **FIGURE 26**).

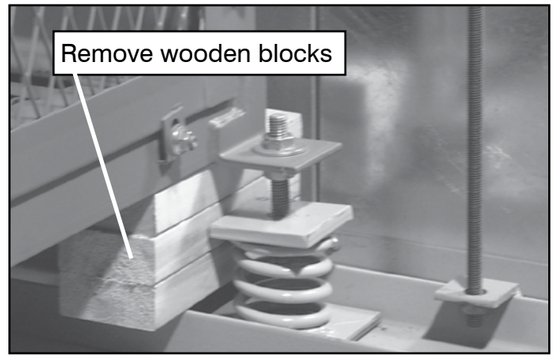

FIGURE 26. Fan shipping restraints located at the base of the fan.

3) Inspect the fans:

4) Check fan bolts and mountings for tightness. Tighten loose screws and bolts.

a) Rotate the impeller by hand; it should turn freely. If not, check for obstructions and contact FläktGroup SEMCO (see the back cover for contact info.).

b) Ensure that the fan wheel and fan interior are clean are free of debris.

c) Check fan set screw for tightness; re-tighten if necessary.

5) After completing inspection checks on motors and fans, turn power on then off quickly. Power should be on just long enough to start fan rotation.

6) If fans start rotating in the wrong direction (see arrow on the blower) turn off power immediately. To correct rotation, lock out power to the unit feeder, and switch any two line power wires. To change rotation of only an inverter driven wheel and not the fans, switch any two VFD line power wires.

7) Using an amp probe or amp meter, check the actual operating current of the motor to make sure it is not being overloaded or underpowered. The operating current must not exceed the nameplate current.

8) Allow the assembly to run for about an hour. During this time, listen for any unusual sounds. To correct noise problems, see **TROUBLESHOOTING** on **PAGE 21**.

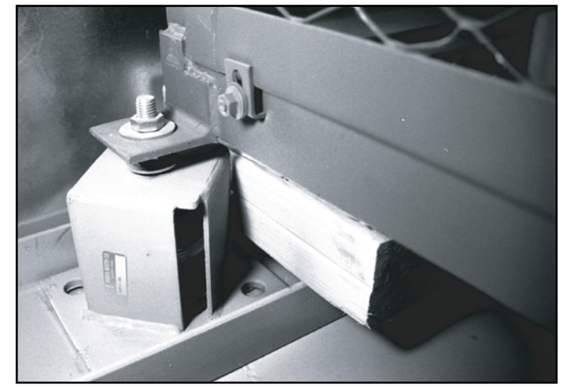

FIGURE 27. As an option, the fans can be mounted on seismic arrest mounts.

COILS

Heating and/or cooling coils can be ordered with the energy recovery system. All necessary heating and/or cooling coils have been installed at the FläktGroup SEMCO factory. However, before operating them, a brief pre-startup inspection is recommended.

INSPECTION

- Inspect all pipe connections to verify they are tight and that no damage has occurred during transit or on-site installation.
- **STEAM COILS** – Be sure that the unit is level so the coils inside the casing slope toward the header.
- **HOT WATER COILS** – Check the freeze protection thermostat for proper operation so that it will function to prevent freeze-ups.

OPERATION

- **STEAM COILS** – Non-freeze steam coils are designed to operate steam pressures up to, and including, 150 psig.
- During initial operation, make sure that condensate flows back to the headers. Check for leaks.
- **HOT WATER COILS** - are designed to operate at pressures to 250 psig, and temperatures to 250°F. Check for leaks during initial operation.
- **COOLING COILS** - are designed to withstand pressures to 250 psig. During initial operation, check for leaks (See **FIGURE 28**)
- **CONDENSER COILS** - are designed to withstand pressures up to 750 psig. During initial operation, check for leaks.

FIGURE 28. Cooling coils should be checked for leaks during operation.

DAMPERS

While they have been installed and checked at the FläktGroup SEMCO factory, a pre-startup inspection is recommended to be sure that nothing has become detached or damaged during shipment or on-site installation.

INSPECTION

1) Check blade rotation clearance. Verify that blades open and close properly and rotate sufficiently. If they do not, check for obstructions, broken or bent blades, or loose linkage. Correct or repair as necessary (See **FIGURE 29**).

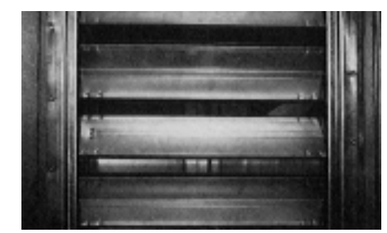

FIGURE 29. Be sure that damper blades open and close properly and have sufficient rotation clearance.

2) Be sure that actuator arms and bars connecting damper motors to control rods or shafts are tight. (See **FIGURE 30**).

FIGURE 30. Damper actuator.

3) The dampers are controlled by electric motors. Make sure that wiring is complete. Check the wiring diagram on the motor.

4) Turn on power and observe whether or not the controls trigger dampers correctly. Be sure that limit switches close when blades are open and open when blades are closed.

SUPPLEMENTAL HEATERS

For units equipped with supplemental heaters, a minimum clearance of 36 inches (914 mm) must be maintained from the side of the unit featuring the control panel to combustible surfaces, per the National Electrical Code (NEC).

There is a specified minimum clearance of 6 inches (152 mm) on the back facing side of the unit. The minimum clearance should be followed, unless the amount specified by the local building code is greater.

DIRECT GAS BURNERS

All direct-fired gas burners are factory installed and run tested. The air heat burners are composed of aluminum, corrosion resistant material. The burners allow the unit to treat outdoor, incoming air with uniform, odorless and smokeless flames. For start-up and adjustment instructions please refer to the manufacturer's literature. Contact FläktGroup SEMCO if additional copies are needed.

DUCT FURNACE

All indirect gas-fired furnaces are factory installed, run and fire tested. Tubular heat exchangers are composed of stainless steel and mechanically secured to vestibule panels. Since, the duct furnace will be installed downstream of refrigeration and cooling systems, the tubulars have dimpled restrictors for condensation drainage. As gas pressures vary according to job-site, manufacturer's start-up and adjustment instructions **MUST BE** followed. Please refer to the manufacturer's literature included with the unit. Contact FläktGroup SEMCO if additional copies are needed.

HUMIDIFIERS

FläktGroup SEMCO can provide a wide range of humidification options. Humidifier manufacturer, type, and degree of installation can vary from job to job depending upon job specifications. Consult humidifier manufacturer's literature for details related to installation, start-up, and troubleshooting.

ULTRAVIOLET (UV) LIGHTS

Ultraviolet germicidal irradiation (UVGI) lamps are installed downstream on the side of pre and post cooling coils. Access door to UVGI section are interlocked with lights to shut them down when door is opened. Ultraviolet light manufacturer, type, and degree of installation can vary from job to job depending upon job specifications. Consult the UV light manufacturer's literature for details related to installation, start-up, and troubleshooting.

- All power **MUST BE** turned off and the device must be disconnected from any electrical supply mains, before any installation, maintenance, or cleaning can take place.
- Always turn the system off, especially cutting off power to the power supply, before replacing lamps. Failure to do so may produce a protection fault within the power supply. Before re-powering a fixture, follow the manufacturer's instructions to make sure **ALL** connections (including lamp pins) are tight and complete to avoid sparks, shorts, or overheating. A protection fault requires a reset procedure. To reset the "programmed start" function of a power supply, disconnect **ALL** power and power wires and wait one minute. Start by reconnecting A/C power first and then turn on all switches. All lamps should light.
- Using the UV-C lamp system for any purpose other than the one intended or damage to housing, may result in the escape of dangerous UV-C radiation. UV-C radiation may, even in small does cause harm to the skin and eyes.
- UV-C lamp systems that are visibly damaged, **MUST NOT** be operated.
- Doors and access panels bearing a UV radiation hazard label, may have UV-C spectral irradiance greater than 1.7 μW/cm². Doors and access panels with high levels of UV-C spectral irradiance come equipped with interlocking safety switches. The interlocking switches immediately turn off power to the UV-C lamps for your safety. **DO NOT OVERRIDE**.
- When conducting user maintenance, it is recommended to disconnect the power before opening doors and access panels bearing UV radiation hazard labels.
- UV-C barriers bearing UV radiation hazard labels should not be removed.
- **DO NOT** operate UV-C lamps outside of the Ascendant
- Refer to the submittal for UV-C model/and or part numbers as well as replacement parts.

Ultraviolet light manufacturer, type, and degree of installation can vary from job to job depending upon job specifications. Consult the UV light manufacturer's literature for details related to installation, start-up, and troubleshooting.

BIPOLAR IONIZATION SYSTEM

The bipolar ionization system is mounted in the air handler portion of the Ascendant. The power to the ionization unit should be interlocked with fan operation, or controlled via an air pressure switch. The volume of ionization can be adjusted with a 5-step knob. Ionization system manufacturer, type, and degree of installation can vary from job to job depending upon job specifications. Consult the system's manufacturer's literature for details related to installation, start-up, and troubleshooting.

AIR FILTERS

Air filters for the energy recovery system are boxed, tagged and shipped loose inside the system for field installation. This minimizes any risk for filter damage during transit. The air filters must place installed prior to startup or the warranty could be voided.

Throughout the operating life of the system, it will be necessary to replace filters as they accumulate dirt from the air stream.

The system is equipped with two pressure differential gauges. As air filters accumulate dirt, the pressure differential will rise.

The **PRE-FILTER CAPACITY AND RESISTANCE TABLE** (**FIGURE 31**) and **FINAL FILTER CAPACITY AND RESISTANCE TABLE** (**FIGURE 32**) provide data for most pre-filters and final filters used in FläktGroup SEMCO systems. For each filter size, the pressure differential (resistance at capacity) using new, clean air filters in air streams is shown. The capacities columns define airflow in cubic feet per minute. For specific airflows, interpolating and estimating will provide adequate data.

WHEN TO REPLACE FILTERS

It is recommended that filters be changed when the pressure differential gauge reaches the final resistance rating illustrated in **FIGURE 31** and **FIGURE 32** (on **PAGE 16**). Experience with the new system may suggest changing filters at a slightly higher or lower reading. Depending upon the total volume of air required in the building, altering the replacement differential may be necessary. But waiting to change filters when the pressure differential reaches or approaches a higher-than-recommended figure would mean using packed air filters that seriously reduce airflow.

If the system is ordered with final filters, then these will be located behind the pre-filters.

The procedure for removing the old filters and installing new ones is the same as described above.

For systems equipped with pre-filter and final filter banks, it is recommended that pre-filter banks be changed twice as often as final filters.

For air filter replacement, a rigid, cell-type filter that matches the specifications shown in the **PRE-FILTER AND FINAL FILTER CAPACITY AND RESISTANCE TABLES ON** **PAGE 16** is recommended.

PRE-FILTER CAPACITY AND RESISTANCE DATA									
FILTER DEPTH	NOMINAL SIZE (INCHES)	ACTUAL SIZE (INCHES)			CAPACITIES (CFM)		RESISTANCE AT CAPACITY (INCHES W.G)		
		WIDTH	HEIGHT	DEPTH	MEDIUM	HIGH	MEDIUM	HIGH	FINAL
4"	12x24x4	11.38	23.38	3.88	600	1,200	0.12	0.35	0.90
	24x24x4	23.38	23.38	3.88	1,200	2,400	0.12	0.35	0.90
2"	12x24x2	11.38	23.38	1.88	500	1,000	0.08	0.28	0.90
	12x24x2	23.38	23.38	1.88	1,000	2,000	0.08	0.28	0.90

FIGURE 31. Pre-filter Capacity and Resistance Data

12" FINAL FILTER CAPACITY AND RESISTANCE DATA*						
FILTER MEDIA EFFICIENCY	NOMINAL SIZE (INCHES)	ACTUAL SIZE[1] (INCHES)		AIRFLOW CAPACITY (CFM)	RESISTANCE (IN.WG.)	
		WIDTH	HEIGHT		INITIAL	FINAL[2]
60-65%	12x24	11.38	23.38	1,000	0.29	1.5
	24x24	23.38	23.38	2,000	0.29	1.5
80-85%	12x24	11.38	23.38	1,000	0.50	1.5
	24x24	23.38	23.38	2,000	0.50	1.5
90-95%	12x24	11.38	23.38	1,000	0.68	1.5
	24x24	23.38	23.38	2,000	0.68	1.5

FIGURE 32. 12" Final Filter Capacity & Resistance Data

***NOTES:**

1) Actual depth of the 12" filter is 11.50"

2) Maximum recommended final resistance. System design may require a lower change-out resistance.

Maximum operating temperature limit for the filters is 180°F in continuous operation and 200°F in intermittent operation.

MODEL SIZE					
	SIZE 5	SIZE 9	SIZE 13	SIZE 18	SIZE 24
SA FILTER QTY AND SIZE	24" x 24" (4)	24" x 24" (4)	24" x 24" (6)	24" x 24" (9)	24" x 24" (12)
	—	12" x 24" (4)	12" x 24" (3)	12" x 24" (3)	12" x 24" (7)
EA FILTER QTY AND SIZE	24" x 24" (2)	24" x 24" (2)	24" x 24" (3)	24" x 24" (6)	24" x 24" (12)
	12" x 24" (2)	12" x 24" (3)	12" x 24" (3)	12" x 24" (2)	—

FIGURE 33. Quantity and size of filters in standard units

** Please see submittal for specific filter quantities and sizes*

UNIT CONTROLS

SEQUENCE OF OPERATION

Refer to the Unit Submittal for a detailed sequence of operation, performance, and wiring schematic.

The typical sequence of operation is that upon a call for dehumidification, the pre-cooling coil is active and cools the process air to the temperature shown in the submittal. The dehumidification wheel bypass damper modulates partially closed to produce the correct proportion of process air through the wheel and bypass. The regeneration heat source modulates to maintain the humidity setpoint. The process and regen fans modulate to maintain their supply CFM setpoints.

PROGRAMMING PARAMETERS

PROGRAMMING THE WHEEL MOTOR VFD:

NOTE: *For most V1000 parameters, the drive must be in a* **STOP** *condition while programming.*

1) Press **ESC** key until left-most part of drive's display shows **F. DRV** LED will also be lit.

2) Press **DOWN** arrow twice to display **PAr** then press **ENTER** key. (Parameters are now accessible)

3) Using **UP/DOWN/RIGHT ARROWS**, select parameters to be read and/or changed starting with A1-01.

4) If required, use **RIGHT ARROW** or **ENTER** key to scroll to right-most digits of parameter name. Digits will flash.

5) Press **ENTER** key to read value.

6) Using **UP/DOWN/RIGHT ARROWS**, set desired value then press **ENTER** key to store value. Drive will accept value,
if valid, then re-display parameter number (i.e. B1-01, C1-02, etc.)).

7) Repeat **STEPS 3 - 6** to program remaining parameters per application requirements.

8) When complete, press **ESC** key until left-most part of drive's display shows **F. DRV** LED will also be lit.

V1000 DRIVE IS NOW READY TO RUN.

PROGRAMMING PARAMETERS

PARAM. TITLE	FUNCTION	OPTIONS	DEFAULT SETTING	SEMCO SETTING	COMMENTS
B1-01	Frequency Reference Selection 1	0: Operator - Digital preset speed d1-01 to d1-17. 1: Terminals - Analog input terminal A1 or A2. 2: MEMOBUS communications 3: Option PCB 4: Pulse Input (Terminal RP)	1	1	Selects the frequency reference input source.
B1-02	Run Command Selection 1	0: Operator - RUN and STOP keys on the digital operator. 1: Digital input terminals 2: MEMOBUS communications 3: Option PCB	1	1	Selects the run command input source.
B1-04	Reverse Operation Selection	0: Reverse enabled. 1: Reverse disabled.	0	1	Permits or prohibits reverse operation.
B1-07	Local / Remote Run	0: Run command must be cycled 1: Continue running	0	1	Drives run if run command is active in new controller
B1-17	Run Command at Power Up	0: Run command must be cycled 1: Run command issued	0	1	Drive runs if run command is active at power up
C1-01	Acceleration Time	0.0 to 6000.0	10	60	Acceleration time
C1-02	Deceleration Time	0.0 to 6000.0	10	60	Deceleration time
C4-01	Torque Compensation Gain	0.00 to 2.50	1	0	Compensates for added load by increasing output voltage.
C6-02	Carrier Frequency Selection	1 : 2.0 kHz 2 : 5.0 kHz 3 : 8.0 kHz 4 : 10.0 kHz 5 : 12.5 kHz 6 : 15.0 kHz 7 : Swing PWM1 (Audible sound 1) 8 : Swing PWM2 (Audible sound 2) 9 : Swing PWM3 (Audible sound 3) A : Swing PWM4 (Audible sound 4) B to E: No setting possible F : User defined (determined by C6-03 through C6-05)	3	1	Lower carrier frequencies increase torque and audible noise.
E1-03	V/f Pattern Selection	0 to FF	F	F	Allows custom voltage frequency curve.
E2-01	Motor Rated Current	10 to 200% of drive rated current	kVA dependent	0.57 (208-230) 0.29 (460)	
E2-03	Motor No-Load Current	0 to [E2-01]	kVA dependent	0.23 (208-230) .11 (460)	Nameplate amps * 40% Consult SEMCO

**FläktGroup® SEMCO® does not recommend use with motors other than those provided with the unit. Consult Yaskawa for assistance in programming for use with other motors.*

PARAM. TITLE	FUNCTION	OPTIONS	DEFAULT SETTING	SEMCO SETTING	COMMENTS
H5-01	Drive Node Address	0-20H	1F	*	Serial Communications address Set at factory. Consult SEMCO
H5-09	CE Detection Time	0.0 - 10.0s	2	10	Sets the time required to detect a communications error.
L1-01	Motor Overload Protection	0: Disabled 1: Std. Fan Cooled (speed range < 10:1) 2: Std. Blower Cooled (speed range 10:1) 3: Vector Motor (speed range 100:1)	1	3	Overload function based on motor type
L2-01	Momentary Power Loss Operation Selection	0: Disabled - Drive trips on (Uv1) fault when power is lost. 1: Power Loss Ride-Thru Time - Drive restarts if power returns within the time set in L2-02. 2: CPU Power Active - Drive will restart if power returns as long as the CPU is working.	0	1	Allows drive to restart after power loss without a fault
L3-01	Stall Prevention Level during Acceleration	0: Disabled 1: Enabled 2: Intelligent Stall Prevention	1	0	Disables stall prevention during acceleration
L3-04	Stall Prevention Level during Deceleration	0: Disabled 1: General Purpose Stall Prevention 2: Intelligent Stall Prevention 3: Stall Prevention with Braking Option 4: Over excitation Braking	1	0	Disables stall prevention during deceleration
L3-05	Stall Prevention Level during Run	0: Disabled 1: Decelerate Using C1-02 2: Decelerate Using C1-04	1	0	Disables stall prevention during run
L5-01	Number of Auto Restart Attempts	0 to 10	0	5	Selects number of automatic restart attempts after fault.
L8-05	Input phase loss protection	0: Disabled 1: Enabled	1	0	Selects the detection of input current phase loss, power supply voltage imbalance, or main circuit electrolytic capacitor deterioration.
L8-07	Output phase loss protection	0: Disabled 1: Enabled 2: Enabled	0,1	0	Selects the output Phase loss detection

TROUBLESHOOTING

The basic troubleshooting strategy is to determine if the problem resides with the program, controller, input devices, outputs, wiring, or controlled device.

Check sensor input values using the BACview keypad to confirm that all inputs are operating correctly and values are as anticipated.

View setpoints using the BACview setpoint menu. Compare setpoints to the design performance shown in the unit submittal.

View outputs using the BACview setpoint menu to view the output determined by the controller.

Measure the output at the controller, then at controlled device and compare to the output calculated by the controller. Are all controller outputs set to automatic? Are inverters set to **AUTO** and **NOT HAND MODE**?

The controller has hand-off-auto capabilities which can be useful for troubleshooting or for emergency operation. For automatic operation, all output switches on the controller should be to the left.

Manuals for the inverters and any gas-fired equipment are shipped with the unit. Manuals for damper actuators are available from the manufacturer's web site. Condensing units for DX coils are provided by other than FläktGroup SEMCO.

TROUBLESHOOTING THE WHEEL MOTOR VFD

A failure in the drive can fall into one of two categories, **ALARM** or **FAULT**.

WHEN THE DRIVE DETECTS A FAULT:

- The digital operator displays text that indicates the specific fault and the **ALM** indicator LED remains lit until the fault is reset.
- The fault interrupts drive output and the motor coasts to a stop.
- It will remain inoperable until that fault has been reset.

WHEN THE DRIVE DETECTS AN ALARM (MINOR FAULT):

The digital operator displays text that indicates the specific alarm or minor fault and the **ALM** indicator LED flashes.

- The motor does not stop.
- The digital operator displays text that indicates the specific alarm or minor fault and the **ALM** indicator LED flashes.
- Remove the cause of an alarm or minor fault to automatically reset.

In the event of an alarm or fault consult the Yaskawa V1000 Technical Manual (page 241), also available at www.drives.com, or contact FläktGroup SEMCO Technical Service at (573) 443.3636 for assistance.

TROUBLESHOOTING THE DIRECT-FIRED GAS HEATER (ON APPLICABLE UNITS)

Burner safeties consist of:

- Low gas pressure switch (located on the entering side of the dual automatic safety shutoff valve)
- High gas pressure switch (located on the leaving side of the dual automatic safety shutoff valve)
- Automatic reset airflow switch (located inside the unit measuring air pressure drop across the burner profile plate)
- High limit (controller mounted inside the burner control panel)
- Flame rod - signal can be measured at Honeywell R7847A Flame Amplifier port provided on the Honeywell RM7895A Flame Relay. The flame rod signal is 0 – 5.0 VDC, with 1.25 VDC volts minimum required. Refer to Honeywell literature for detailed information.

If the FläktGroup SEMCO controller is calling for heat, and all safeties are made, then 120VAC power will be delivered to terminal # 7 on the Honeywell flame relay. If 120VAC power is not present, then trace the voltage using the SEMCO electrical schematic. If voltage is present but the burner does not light:

- Is there air in the gas line?
- Are the gas valves opening?
- Measure the flame amplifier signal
- Is the flamerod clean?

If you have additional questions, please contact FläktGroup SEMCO Service at (573) 443.3636.

TROUBLESHOOTING: FANS AND MOTORS

PROBLEM	POSSIBLE CAUSES	SOLUTION
VIBRATION	Out of balance fan motor.	Check for dirt. If dirty, clean motor. Airfoil blades are usually hollow. Check inside for moisture. If it is accumulating, drill 3/16" drain hole on trailing edge to solve accumulation problem.
	Loose mounting bolts.	Tighten bolts.
	Bent fan shaft.	Check shaft with dial indicator. If bent, replace shaft immediately.
	Fan operating in stall or unstable flow.	Make sure system is operating at design static pressure and design flow rates.
NOISE - MOTORS	Supply voltage is high or inconsistent.	Check supply voltage with voltmeter. Correct supply voltage if necessary.
POOR AIR PERFORMANCE	Incorrect fan rotation.	Rotation can be changed on 3-phase motors by reversing any 2 motor leads.
	Abrupt turn in duct close to fan discharge or air prespin caused by elbows at fan inlet.	Install turning vanes or elbow splitters in duct. If more change is needed, discharge position may have to be changed.
	If fan has inlet volume control, is it properly installed?	Inlet volume control must be installed with prespin of the air in direction of wheel rotation when control is partially closed.
	Devices for air modulation closed or plugged.	Open or unplug.
	Clogged filters.	Replace filters.
	Improperly mounted fan wheel, or off-center wheel.	Center fan betweeninlet cones to avoid overloading one side and starving the other side. Correct wheel mounting.
	Fan power draw unexpectedly low.	• Correct air prespin into fan inlet. • Fan drive sheaves may be set for too low fan speed; correct if necessary. • Resistance to air flow is much higher than calculated; check for closed damper or other duct obstructions; recheck duct layout.
	Fan power draw unexpectedly high.	• Fan speed may be too high. Fan may operate without duct work at low resistance so too much air flows. • Fan may be handling ambient air instead of intended hot, less dense air. • Fan may be running backward; check and correct if necessary.
	Damaged or dirty fan or system.	Clean fan or system, or replace damaged parts.
MOTOR PROBLEMS	Incorrect wiring.	Correct.
	Fan speed too high.	Check fan speed against submittal.
	Parts improperly installed or binding.	See "Inspection" at beginning of this section. Re-check and correct if necessary.
	Bearings improperly lubricated.	See motor lubrication instruction in the maintenance section. Do not over-lubricate.
	Protection devices may be improperly sized.	Check against submittal.

MAINTENANCE

DAILY MAINTENANCE

It is recommended that the unit be visually inspected daily. Taking a few moments each day to make sure that the unit is functioning will save many future hours, dollars and headaches. Each day, ensure that:

- The rotor is rotating under power;
- The motor is running;
- All devices are on and operating (the variable frequency controller, temperature controller, and rotation detector).

All other maintenance activity should be conducted monthly, quarterly, semiannually or annually as described in this manual. All essential maintenance services are summarized in the **MAINTENANCE SCHEDULE** below.

MAINTENANCE SCHEDULE			MONTH				
COMPONENT	SERVICE	STARTUP	1	3	6	9	12
WHEEL	Rotor bearing lubrication	x			x		x
	Bearing bolts tightness	x					
	Bearing set screw tightness	x	x		x		x
	Motor and gear reducer bolt tightness	x	x		x		x
	Check seals	x	x		x		x
	Check/clean variable frequency controller						x
	Drive System	X			X		X
FAN	Check/clean shaft and wheel	x		x	x	x	x
FAN MOTORS	Clean motors				x		x
	Inspect motor connections				x		x
	Check operating current				x		x
	Check motor bolt tightness				x		x
	Lubricate motor bearings						x
DAMPERS	Check rotor blade clearance	x					
	Inspect damper for dirt and foreign matter			x	x	x	x
	Inspect dampers seals for deterioration			x	x	x	x
FILTERS	Replace based on pressure differential						

MAINTENANCE: SYSTEM

The system enclosure requires very little maintenance since it is constructed of strong, weather-resistant materials. Equipment contained within the enclosure requires regular maintenance to keep the system operating smoothly. You will find maintenance instructions for every component in this section.

- Inspect the enclosure periodically:
- Check for air leaks in the casing
- Ensure modules remain level
- Make sure that doors do not bind
- Check around all penetrations and roof joints to be sure that seals remain tight and do not leak

MAINTENANCE: WHEEL

ROTOR BEARING

The rotor bearing's anticipated average life is 20 years. The bearing was greased prior to shipment. However, lubrication just prior to start-up is recommended.

RECOMMENDED LUBRICATION

The bearing's lubrication cycle depends upon the range of temperatures normally experienced by the unit 24 hours a day. For a typical temperature range of -20°F to 130°F, lubrication every 6 months is adequate. If higher temperatures (130° to 170°F) are experienced, lubrication every 3 months is recommended. For environments with temperatures above 170°F, consult FläktGroup SEMCO.

Grease should be pumped into the 2 bearing grease points - one located on each side of the rotor. (See **FIGURE 34**) A high grade NLGI No. 2 grease is recommended. **NOTE:** If a rotor bearing requires replacement, contact FläktGroup SEMCO for detailed instructions.

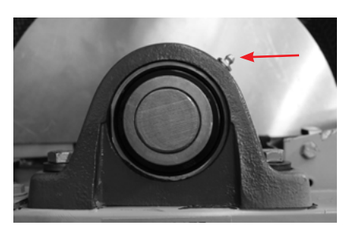

FIGURE 34. Grease should be pumped into two rotor bearing grease points, one located on each side of the rotor. Lubrication frequency depends upon operating temperatures normally experienced around the rotor.

The bearing bolts normally require checking at start-up only. The bearing bolts should be torqued to 50 ft-lbs.

BEARING SET SCREWS

1) The bearing set screws should be checked periodically for tightness. A bearing set screw is located on each side of the rotor (See **FIGURE 35**). **RECOMMENDED CHECKING FREQUENCY** – Bearing set screws should be checked at start-up, one month after start-up, then every 6 months thereafter.

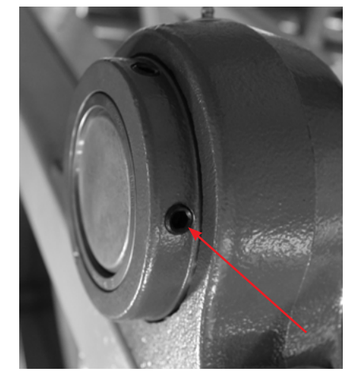

FIGURE 35. The bearing set screws, one on each side of the rotor, should be checked for tightness every six months.

2) The bearing set screws should be torqued to 15 ft-lbs.

MOTOR

The motor has deep grooved, double-shielded bearings with sufficient lubricant packed into the bearings by the manufacturer for "life lubrication." The initial lubricant is supplemented by a supply packed into larger reservoirs in the end shield at the time of assembly. No grease fittings are provided as the initial lubrication is adequate for up to 10 years of operation under normal conditions. No lubrication is required.

WHEEL DRIVE SYSTEM

The chain and sprockets should be checked periodically for wear and correct chain tension after start-up and semi-annually thereafter. Although the Ascendant wheel rotates at low speeds – less than 25 revolutions per hour – unnecessary wear can still result from misalignment or improper tensioning.

DRIVE SYSTEM ALIGNMENT

At startup, observe the chain as the wheel rotates. The chain should mesh with the teeth on the wheel perimeter. If the teeth do not mesh, remove the screws

holding the bracket to the perimeter, correct the position, laterally and/or along the perimeter, so the teeth now mesh, and reattach the bracket using #10 x ¾" tek screws.

CHAIN TENSION DETAIL

If the chain is excessively tight, chain damage and gear motor failure may result. If the chain is too loose, the chain may slip off the wheel sprocket(s). A good rule of thumb for amount of slack is 2 to 4 percent of the distance between the idler and the point where the chain connects with the wheel.

The tensioner should be positioned so that after final tensioning it is approximately at a 45 degree angle as shown on **FIGURE 36**. Too little tension will limit the effectiveness of the tensioner and too much may cause premature chain failure.

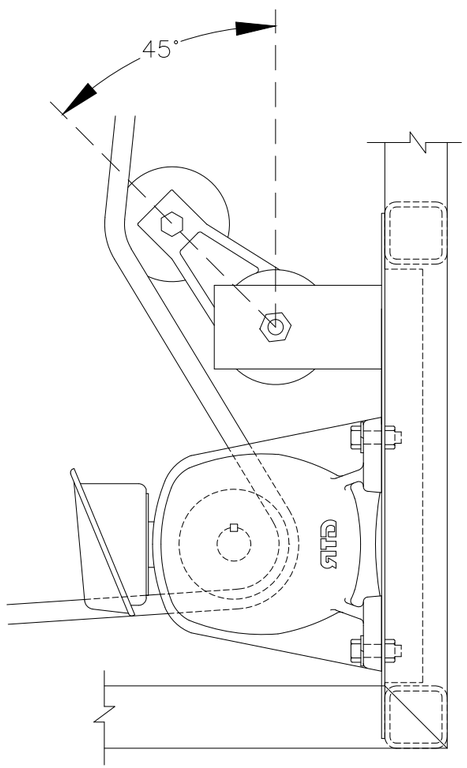

FIGURE 36. Detail of TE-1567 RO Idler

TENSIONER ADJUSTMENT

1) Loosen the tensioner by accessing the mounting bolt from the back side of the mounting bracket.

2) Adjust the tensioner base by using a wrench on the adjusting nut to load the tension spring.

3) Tighten until chain has proper amount of slack and pre-load tensioner spring. Utilize tick marks on the tensioning arm and base as a guide. After final tensioning the tensioner should be able to move one full tick mark when pulled to compress the spring (removing chain tension).

VARIABLE FREQUENCY CONTROLLER

1) The variable frequency controller is cooled by air flowing through the heat sink slots. The slots must never be allowed to become obstructed with dirt or foreign material. Periodically check and clean the heat sink slots with compressed air or a vacuum. Airflow must never be restricted in any way.

2) Check and clean the variable frequency controller annually.

MEDIA CLEANING

Semi-annually, or more frequently if pressure drop across the wheel increases at a given airflow, clean wheel media by air blowing at 100 psi while using a vacuum or other device to collect any dust or debris that may exit the other side. Extra care should be taken to ensure that the air nozzle or vacuum/other device does not touch or damage the rotor surface.

SEALS

Seals should be checked to ensure they remain in gentle contact with the wheel after the first month of operation, and every 3 months thereafter.

MAINTENANCE: FANS

Check shafts and fan wheels every three months for dirt buildup, corrosion and cracks, and other signs of stress or fatigue. Clean as necessary, and apply new coatings when appropriate.

MAINTENANCE: FAN MOTORS

- Motors will operate effectively for years if operated by proper current and kept clean, dry and properly lubricated.
- Clean motors every six months. Use moderate air pressure (25-30 psi) to blow away dirt from vent fins and other accessible areas.
  NOTE: Keep areas surrounding the motors clear so air can circulate freely through the motor to cool it.
- Inspect connections every six months. Watch for frayed or exposed wiring and loose connections. Repair or tighten as necessary.
- Check operating current every six months. Make sure that motors continue to operate at faceplate current or below.
- Check for vibration and for mounting-bolt tightness every six months. Tighten any loose mounting bolts. Make sure that motor runs smoothly without vibrating.
- Lubricate motor bearings with one or two squirts of high grade, lithium-based grease annually (Chevron SRI #2 or similar recommended). Do not over lubricate! Consult motor manufacturer for detailed lubrication instructions.

MAINTENANCE: DAMPERS

- Every 3 months, inspect dampers, arms, bars, and control rods and shafts for dirt and other foreign matter that would impede normal movement and prevent blades and seals from seating properly. Clean as necessary.
- Inspect seals every three months to be sure that none have pulled loose or deteriorated. If replacement is required and the seal can be replaced, remove it and replace with a new seal of the same shape, design and material used originally. Do not use a different size or shape. In some instances, the seal may not be replaceable and it may be necessary to replace the entire blade.
- No lubrication required. Damper shafts utilize non-lubricating bearings.

MAINTENANCE: COILS

Heating and cooling coils function at peak efficiency when clean and free of foreign matter. Frequent visual inspections should be made, and any built up dirt and foreign matter should be removed. A fin comb may be required to remove matter entangled in fins or coils (See **FIGURE 37**), but flushing with water under normal local pressure will remove most particulates.

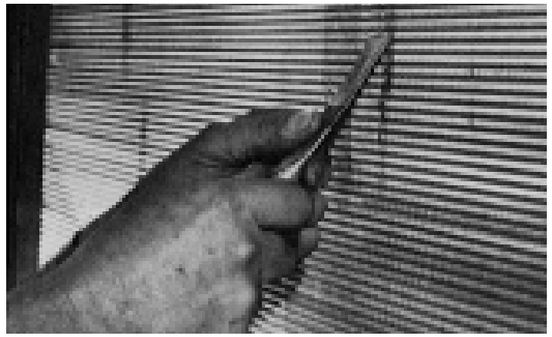

FIGURE 37. A fin comb may be used to remove matter entangled in fins, as well as to straighten fins. But normally, flushing coils with water under normal pressure will remove most matter.

- An acid or alkaline coil cleaner is recommended every 1 or 2 years, depending upon the degree of oxidation, to thoroughly clean and brighten coils and fins.
- Local water conditions may make it necessary to treat chilled water systems, hot water systems and steam systems to control corrosion, sludge and/or metal oxides. In some water supplies, scale removers and inhibitors may also be required.
- Cooling coils – If water in the system will be exposed to outdoor temperatures that are below freezing, either drain the system before temperatures dip below 32°F, or add glycol to the system to prevent freezing.

FläktGroup®
SEMCO®

WWW.SEMCOHVAC.COM / ASCENDANT® IOM / 20241403

FläktGroup® SEMCO® delivers smart, energy-efficient, air-quality solutions to support every building application. We offer our customers innovative technologies, high-quality products and outstanding performance supported by more than fifty years of accumulated industry experience. The broadest offering on the market and a strong market presence in 65 countries worldwide guarantees that we are always by your side, ready to deliver: Excellence in Solutions.

FläktGroup® SEMCO®
Corporate Headquarters
1800 East Pointe Drive
Columbia, Missouri 65201 USA

573.443.1481

sales.semco@flaktgroup.com

To learn more about FläktGroup® SEMCO® offerings and to contact your nearest representative please visit **www.semcohvac.com**

© Copyright 2024 SEMCO LLC. All Rights Reserved. SEMCO embraces a policy of continuous development and improvement, the right is reserved to supply products which may differ from those illustrated and described in this publication. Specifications are subject to change without further notice. Any FläktGroup SEMCO purchase is subject to FläktGroup SEMCO standard terms and conditions. Certified dimensions will be supplied upon request on receipt of order. SEMCO is a registered Trademark of SEMCO LLC. Other trademarks and logos in this publication may be property of SEMCO, LLC, its subsidiaries or any of its related companies and/or other organizations or individuals.