FläktGroup®
SEMCO®

ELITEPRO SERIES

ENERGY RECOVERY UNIT

INSTALLATION & OWNER'S MANUAL

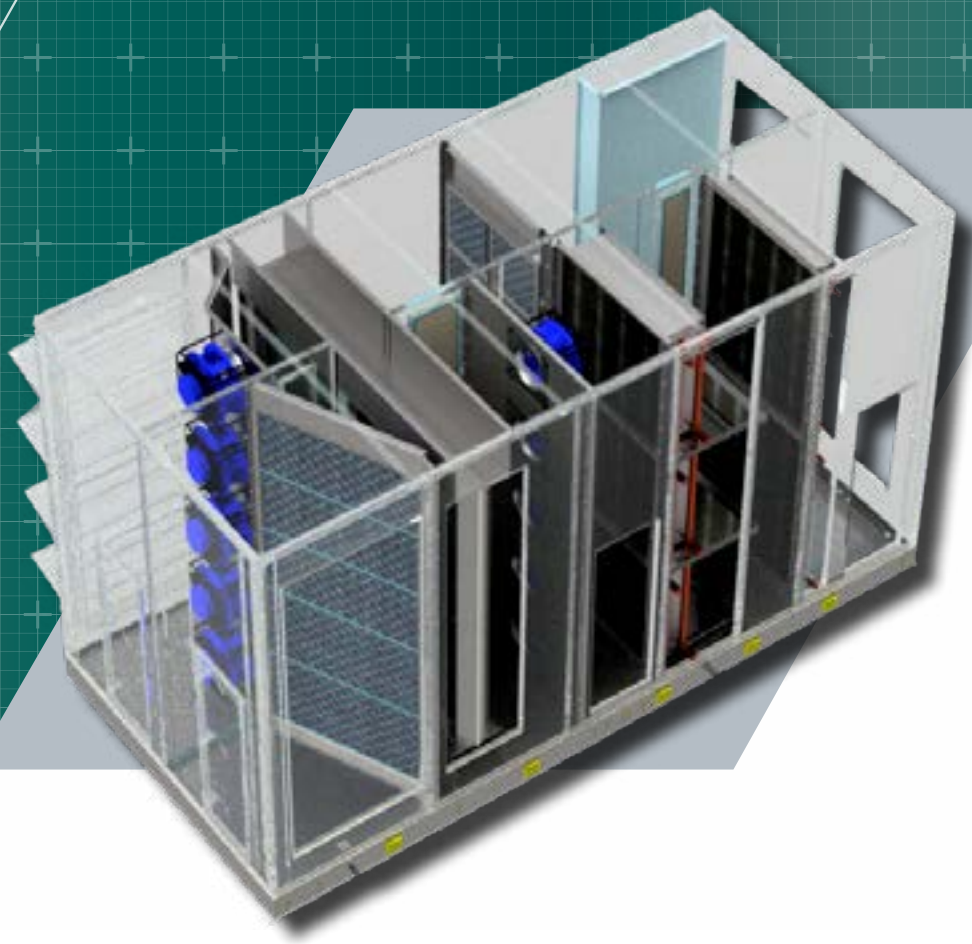

TABLE OF CONTENTS

Introduction....1
The ElitePro Series....1
Definitions....2
System Installation....4
Lifting....4
Inspection....4
Receiving....4
Storage....5
Installation....5
Electrical Penetration....8
Unit Dimensions and Weights....9
Mounting Details, Curb Support — Pre-Conditioner....10
Mounting Details, Grid or Pad Support....12
Mounting Details, Curb Support Dimensions....13
True 3Å®, Fusion 3Å® and Fusion® Wheels....14
Seal Adjustment....15
Purge Adjustment....16
UWC/UWCH Wheels....18
EC Fans....19
EC Fan Removal....20
EC Fan Re-Installation....20
Dampers....20
Coils....21
Gas Burners....21
Air Filters....21
Trouble Shooting — Fans and Motors....22
Maintenance....24
Maintenance: Coils....25
Maintenance: Dampers....25
Maintenance: True 3Å®, Fusion 3Å®, Fusion® Wheel....25

© SEMCO 2024. All rights reserved.

The information in this owner's manual is furnished for informational use only, is subject to change without notice, and should not be construed as a commitment by SEMCO LLC. SEMCO LLC assumes no responsibility for any errors that may appear in this owner's manual.

No part of this publication may be reproduced, stored in a retrieval system or transmitted, in any form or by any means, electronic, mechanical, recording, or otherwise, without the prior written permission of SEMCO LLC.

© SEMCO LLC 2024. All Rights Reserved. SEMCO the SEMCO logo are trademarks of FläktGroup SEMCO LLC.

This appliance is not intended for use by persons (including children) with reduced physical, sensory, or mental capabilities, or lack of experience and knowledge, unless they have been given supervision or instruction concerning use of the appliance by a person responsible for their safety.

Children should be supervised to ensure that they do not play with the appliance.

INTRODUCTION

This manual describes how to store, clean and maintain a FläktGroup® SEMCO® ElitePro Series unit.

Each section provides information to guide the installation and maintenance of all components that may be included in a unit. If more information is needed about one or more items of equipment installed in the unit, consult the manufacturer's manual that accompanies the equipment or is included with our submittal.

It should also be noted that a section or sections of this manual might not apply to your unit. This manual has been prepared to cover the basic ElitePro unit, as well as, all-optional components, that may be included.

THE ELITEPRO SERIES

The FläktGroup SEMCO ElitePro, pre-engineered and factory assembled ERU, offers the ultimate performance in equal transfer of, latent and sensible heat. As with all of the FläktGroup SEMCO energy recovery systems, the ElitePro is capable of treating a building's exhaust and incoming air supply. The ElitePro system may be used as a outdoor air pre-conditioner for an existing conventional air handling system, or as part of an integrated system, which provides total space air treatment. If supplemental heating is required, additional heating and cooling options are available.

At the heart of the ElitePro, lies the industry leading, FläktGroup SEMCO energy recovery wheel. FläktGroup SEMCO's Unitary Wheel Cassette (UWC), True 3Å® and Fusion lines offer superior performance with the highest latent and sensible heat transfer efficiency media on the market (in their given classes). All FläktGroup SEMCO energy recovery wheels are designed and built to have a long, reliable, and relatively maintenance free life. They are all AHRI certified, which verifies that the wheels will perform accurately and consistently, in accordance with ASHRAE Standard 84. In addition to ASHRAE Standard 84, the all FläktGroup SEMCO wheels are independently certified to pass NFPA 90 requirements for flame spread and smoke generation based upon ASTM E84 fire test method.

To preserve the life of the energy recovery wheel, each rotor is coated in ceramic, which provides a high level of corrosion protection. The media found in every FläktGroup SEMCO wheel line, is crafted from aluminum, and coated in a dense layer of corrosion resistant desiccant, prolonging its life, and minimizing air leakage.

The unique design of FläktGroup SEMCO energy recovery wheels, not only prolongs their life, but also contributes to their high performance and reduced energy use. The wheel flutes are designed for less pressure loss, less brake horsepower usage, and smaller fan sizes. While the True 3Å® comes standard with a 3 Ångstrom desiccant coating that limits contaminant carry-over to less than .045%, all FläktGroup energy recovery wheels come with a purge function that further reduces the exhaust air transfer ratio, keeping the supply air free of contamination. Additionally, the UWC line is supplied with hybrid brush/barrier, perimeter and face contact seals to minimize air leakage and wheel bypass, forming the ideal sealing surface.

DEFINITIONS

See **FIGURE 1** on **PAGE 3** for an illustration with correlating numbers to the definitions below.

1. **ADSORPTION -** The physical bonding of water vapor on the surface of the desiccant.
2. **CASSETTE -** The framework supporting the UWC energy recovery wheel.
3. **DESICCANT -** A naturally occurring or man-made material with a high affinity for water vapor.
4. **ENTHALPY WHEEL -** A common term used to describe all rotating, wheel-shaped heat transfer devices that exchange sensible (temperature) and latent (water vapor) energy from one air-stream to another. The word, enthalpy, means heat content or total heat. The term, enthalpy exchanger, may be used.
5. **EXHAUST AIR -** The air from indoors that passed through the energy recovery wheel and is being ducted outdoors.
6. **HEAT WHEEL -** This generally describes all rotating devices which transfer only sensible energy.
7. **MEDIA -** The corrugated material inside the wheel.
8. **OUTDOOR AIR -** The fresh outside air that is being drawn in through the UWC energy recovery wheel. Once it passes through the wheel it becomes the supply air.
9. **RETURN AIR -** Air from the indoor space that is pulled through the UWC energy recovery wheel. Once it passes through the wheel it is referred to as exhaust air.
10. **ROTOR -** The media-filled wheel that rotates. It transfers heat energy and water vapor from one ducted air-stream to the other. Often, the rotor will be referred to as a wheel.
11. **SEAL -** The soft material that closely surrounds the rotor to limit the amount of bypass air around the rotor.
12. **SUPPLY AIR -** Air provided to the indoor space. Outside air that passes through the UWC energy recovery wheel becomes supply air.
13. **UNIT -** Used frequently throughout this manual to mean the UWC energy recovery wheel and attendant components such as cabinets, motors, fans and other parts that work together to make an effective energy recovery product.
14. **WHEEL -** Refers to a rotating wheel containing coated media. The stationery framework supporting the wheel is the wheel cassette.
15. **GEAR MOTOR -** Integrated electric motor and reduction gear train used to provide rotational movement to the UWC.
16. **OUTSIDE AIR DAMPER -** A set of blades used to regulate the outside air flow into the unit.
17. **EXHAUST AIR EC FAN -** high efficiency, single-sided intake EC fans equipped with rear-curved motor impellers and vaneless diffusers.
18. **SUPPLY AIR EC FAN -** high efficiency, single-sided intake EC fans equipped with rear-curved motor impellers and vaneless diffusers.
19. **COOLING AND/OR HEATING COILS -** chilled water, DX cooling coils, hot water or electric pre-heat coils, which allows for a full integration of heating and cooling options.
20. **RETURN AIR FILTER BANK -** 2" MERV 8 or MERV 13 air filters used to filter return air before traveling through the energy recovery wheel.
21. **OUTDOOR SUPPLY AIR FILTER BANK** - 2" MERV 8 or MERV 13 air filters used to filter incoming outdoor air before it reaches the energy recovery wheel.

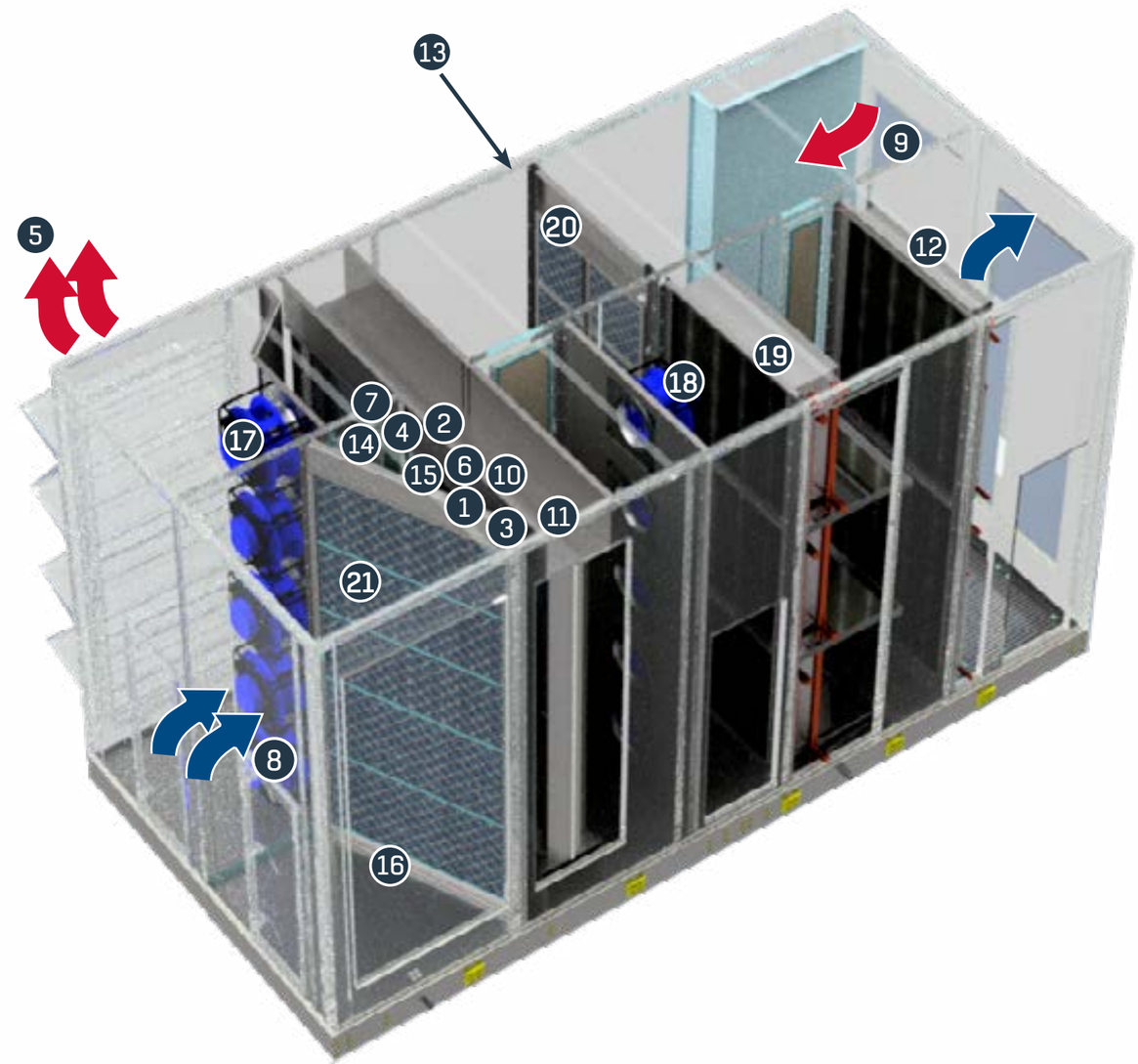

FIGURE 1

See **PAGE 2** for definitions correlating to the numbers above.

SYSTEM INSTALLATION

How to handle the unit upon delivery to the project site.

To off load each of the units, lift only with the lugs located at the base of each unit (see **FIGURE 2**). **DO NOT** lift with a forklift. Spreader bars must be used to hoist sections to avoid damaging the enclosure (see **FIGURE 3**).

FIGURE 2 Lift units only with lugs located at the base of each unit. Do not use a forklift. **NOTE:** Chain hoists used to level unit.

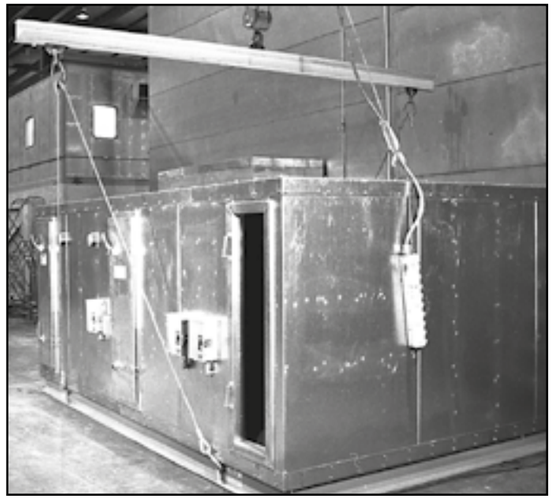

FIGURE 3. Spreader bars must be used for hoisting units to avoid damaging the enclosure.

LIFTING

Chokers need to be adjustable so that the unit is level when it is picked up and, more importantly, set down. Setting the unit down on one corner could cause the unit to rack. Lever chain pullers are useful for this purpose. **WHEN SETTING THE UNIT DOWN, A LEVELING BLOCK MUST BE PLACED UNDERNEATH EACH LIFTING POINT TO PREVENT DEFLECTION.**

INSPECTION

In addition to inspecting units and equipment visually for possible shipping damage, be sure to consult "Inspection" instructions described later in this manual for each optional component.

RECEIVING

A packing list is supplied with each shipped unit and can be found inside the electrical compartment door. The list should be compared with arriving shipments to ensure that all units and equipment have been delivered in good condition. Visible damage should be noted on the trucker's bill of lading when receiving the unit.

1) Prior to leaving the plant, each unit has been tested. You will find the quality assurance label on the inside of the electrical compartment door along with the electrical schematic.

2) If the units are to be stored for more than three days prior to installation, a visual inspection of all equipment is necessary. Report missing or damaged equipment to FläktGroup SEMCO immediately. Freight claims are difficult to justify long after delivery has been completed. If the units are to be stored, see the following section.

3) Units accumulate dust, dirt and corrosive matter (like salt) during shipment to the installation site on open trailers, and are exposed to still more grime on the construction site. Therefore, it is imperative that the exterior of each unit be washed down with soap and water soon after it arrives. Abrasives and solvents should not be used without first consulting FläktGroup SEMCO.

4) The interior of each unit should also be cleaned thoroughly and all equipment should be lubricated before storing or beginning operation. See other sections for specific lubrication instructions.

STORAGE

If the unit, or parts thereof, must be stored before complete or full installation, indoor storage is preferred. If not possible, units should be stored on a hard surface with adequate drainage so that water cannot accumulate under the unit. A solid paved surface would be ideal. Units must be stored on a minimum of six blocks or timbers and raised at least four inches above the ground. Locate the blocks at each corner of the unit and mid-unit on each side. **A BLOCK MUST BE PLACED UNDERNEATH EACH LIFTING POINT TO PREVENT DEFLECTION.**

If stored indoors, units should be protected from damage. If stored outdoors, units must be covered with well-anchored canvas tarps. Heavy-mil plastic tarps should be used with caution as they can trap moisture against the unit.

MOISTURE MUST NOT BE ALLOWED TO ENTER THE UNITS. Whether stored indoors or outdoors, all openings must be closed tightly and piping penetrations must be capped. However, drain connections should be left open.

As noted previously, units must be washed to remove corrosive materials and dirt before storage.

During the storage period, units should be opened and inspected every 30 days. Fans must be inspected and rotated a few times by hand and stopped in a position other than the original position. Fans should also be lubricated as prescribed on the fan label.

If moisture is found in any unit, it must be removed immediately. The source of the moisture must be determined and corrected immediately.

During storage, units should not be stacked on top of each other. Boxes containing bolts, gaskets and other items should be stored inside the units. These items can be found in a box located in the supply air compartment along with a packing list.

INSTALLATION

1) Prepare the installation site by cleaning it of all debris. Supports, which the units will be installed on, should be level. The unit base is designed either for mounting on a concrete pad or onto a roof curb (see **PAGES 9** and **10**).

2) Consult the drawings and submittal provided to determine the location of each unit. Plan to lift the units in the order required for your Installation and within the limitations of your lifting equipment (see **LIFTING** on **PAGE 4**).

3) Hoist the first unit in place. Spreader bars and hoisting lugs must be used on each unit for hoisting. DO NOT USE FORKLIFTS (see **FIGURES 2** and **3** on **PAGE 4**).

** Remove screws inside unit on ship restraint straps in order to remove opening plug panels prior to unit startup.*

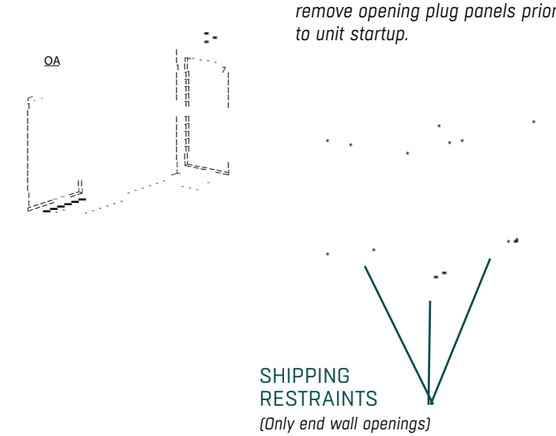

FIGURE 4. Remove screws inside unit on shipping restraint straps in order to remove opening plug panels prior to unit startup.

4) Remove opening plug panels once unit is set in place prior to unit startup. (see **FIGURE 4**)

5) Holes for conduit, piping, etc., are normally precut in the unit panels at the factory. However, if it is necessary to change the location of a hole or to cut a new one, these guidelines must be observed:

- Every hole represents a potential leak. Avoid adding new holes to the enclosure if possible.
- If it is necessary to add a new hole or to move the location of a hole already in the unit, select a location as close as possible to hookup inside the enclosure.
- Cut holes through panels. **DO NOT** cut through seams (where two panels come together).

6) Removable panels are furnished for large items such as coils. Adequate service space in front of these panels should be provided in case the item or items will have to be removed at some future time (see **FIGURE 5**).

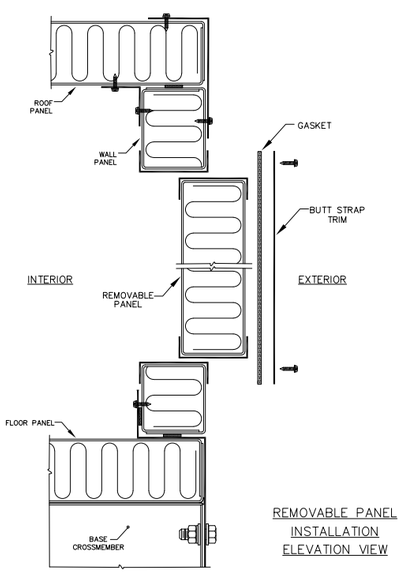

FIGURE 5. Detailed drawing of removable panel installation.

7) Complete service connections to piping and power. Be certain to check specific requirements for electrical power to the energy recovery unit, fans, dampers and other electrical devices.

8) For components, please reference instructions in the following sections of this manual before proceeding.

9) If hoods do not come pre-attached, after installing the unit, attach the outdoor air hood and the exhaust hood working from top to bottom.

10) Align the top hood assembly with the top of the unit opening such that the top flange is immediately at the top of the opening. Align the hood width wise, so as to avoid existing screw heads on the unit enclosure. **NOTE:** The hood may not necessarily be centered on the opening width.

11) Secure hoods to the unit using screws across the top flange through provided mounting holes. (see **FIGURE 6**)

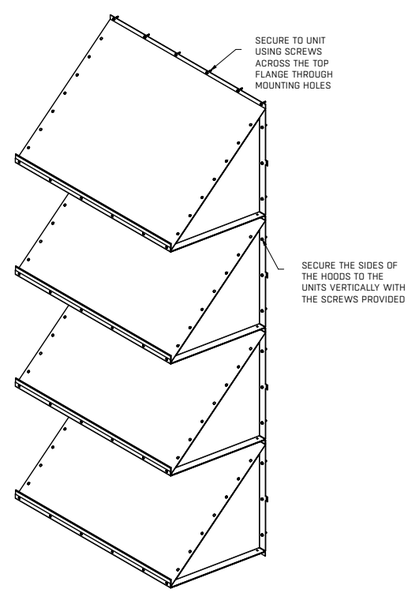

FIGURE 6.

12) Position the next hood — align the holes in the bottom of flange of the upper hood with the top flange of the lower hood, ensuring that the lower hood laps **BEHIND** the upper hood as shown in **FIGURE 7**. Secure overlapping flanges at sides to the unit using screws through provided mounting holes. (see **FIGURE 8)**

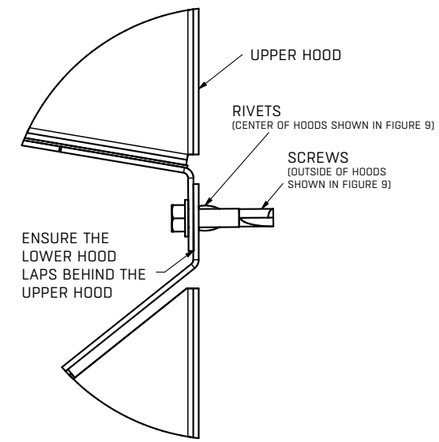

FIGURE 7.

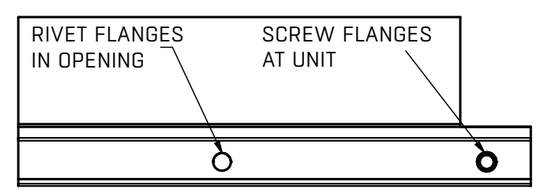

FIGURE 8.

13) Secure the sides of the hoods vertically with the provided screws.

14) Rivet the center mating flanges of the hoods together in the opening using the aligned holes. (see **FIGURE 8**)

ELECTRICAL PENETRATION

PRE-CONDITIONER

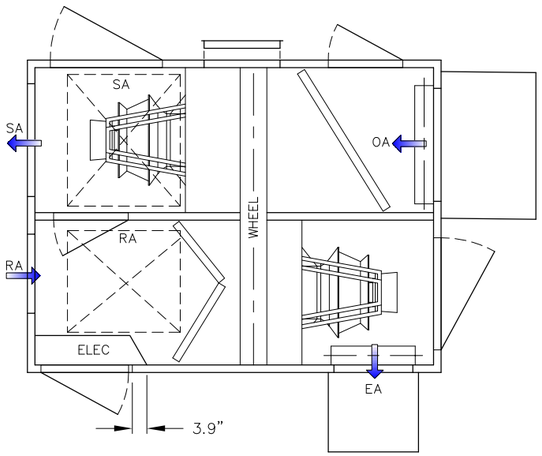

PLAN VIEW
ELECTRICAL PENETRATION AREA

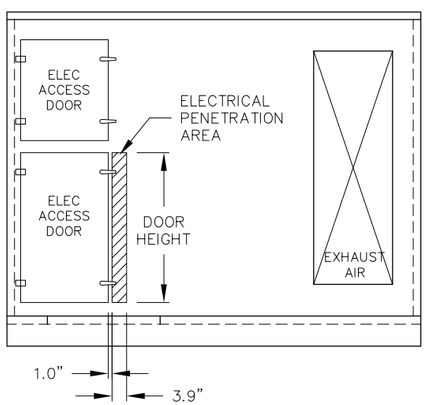

WALL ELEVATION

ELT-C, ELT-H, ELT-CH, ELT-CGB

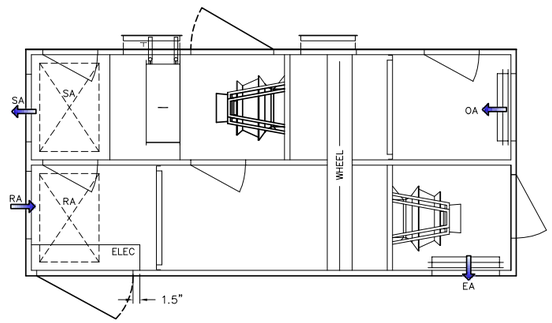

PLAN VIEW

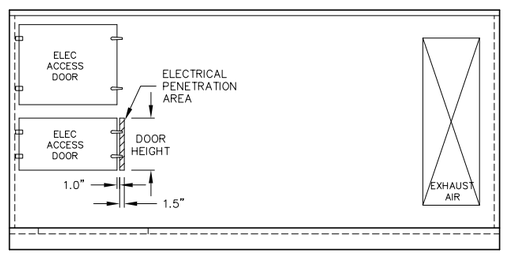

WALL ELEVATION

UNIT WEIGHTS AND DIMENSIONS

UNIT WEIGHTS			
UNIT SIZE	CONFIGURATION	UNIT O.D. (L x W) DIMENSIONS IN INCHES	WEIGHT (LBS.)
ELT-053	H	154.5 x 75.0	4,100
	C, HC	178.8 x 75.0	5,000
	CH	202.3 x 75.0	5,200
	CGB	237.1 x 75.0	5,600
ELT-060	PRE-CONDITIONER	91.4 x 67.5	2,810
ELT-075	PRE-CONDITIONER	109.7 x 73.4	3,450
ELT-085	H	154.5 x 89.0	5,000
	C, HC	178.8 x 89.0	5,300
	CH	202.1 x 89.0	6,500
	CGB	245.9 x 89.0	6,700
ELT-090	PRE-CONDITIONER	112.2 x 79.2	3,800
ELT-110	PRE-CONDITIONER	123.1 x 83.2	4,270
ELT-120	H	161.6 x 93.0	5,900
	C, HC	186.8 x 93.0	6,900
	CH	210.1 x 93.0	7,200
	CGB	254.2 x 93.0	9,200
ELT-130	PRE-CONDITIONER	135.0 x 90.0	5,000
ELT-150	H	166.4 x 102.0	7,900
	C, HC	190.8 X 102.0	8,800
	CH	214.1 x 102.0	9,000
	CGB	258.1 x 102.0	11,100
ELT-175	H	166.4 x 113.0	8,200
	C, HC	190.8 x 113.0	10,900
	CH	214.1 x 113.0	10,400
	CGB	263.0 x 113.0	13,200
ELT-200	H	166.4 x 113.0	8,400
	C, HC	190.8 x 113.0	10,800
	CH	214.1 x 113.0	10,600
	CGB	263.0 x 113.0	14,400

FIGURE 9

OPENING CONFIGURATION OPTIONS

ARRANGEMENTS I-L

ELT-C, ELT-H, ELT-CH, ELT-HC, ELT-CGB

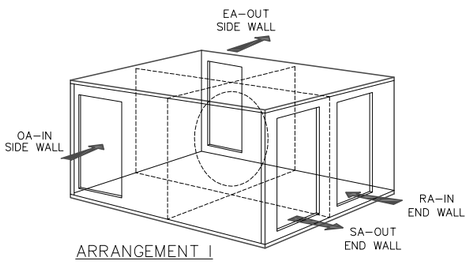

ARRANGEMENT I

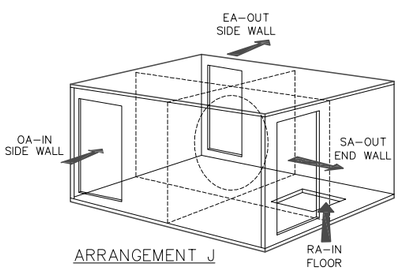

ARRANGEMENT J

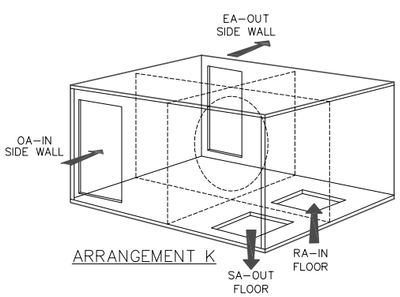

ARRANGEMENT K

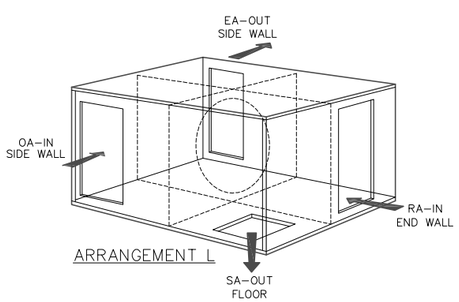

ARRANGEMENT L

ARRANGEMENTS M-P

ELT-C, ELT-H, ELT-CH, ELT-HC, ELT-CGB

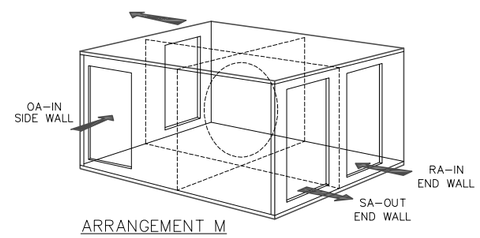

ARRANGEMENT M

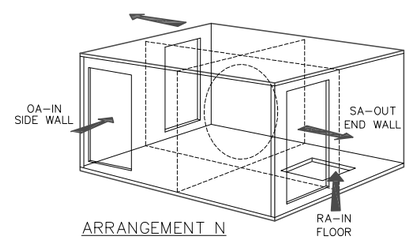

ARRANGEMENT N

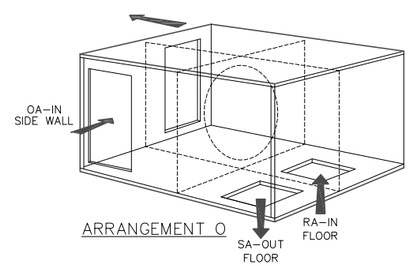

ARRANGEMENT O

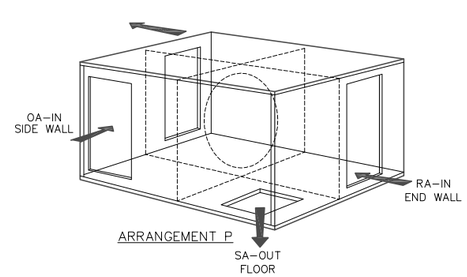

ARRANGEMENT P

MOUNTING DETAILS, CURB SUPPORT

PRE-CONDITIONER

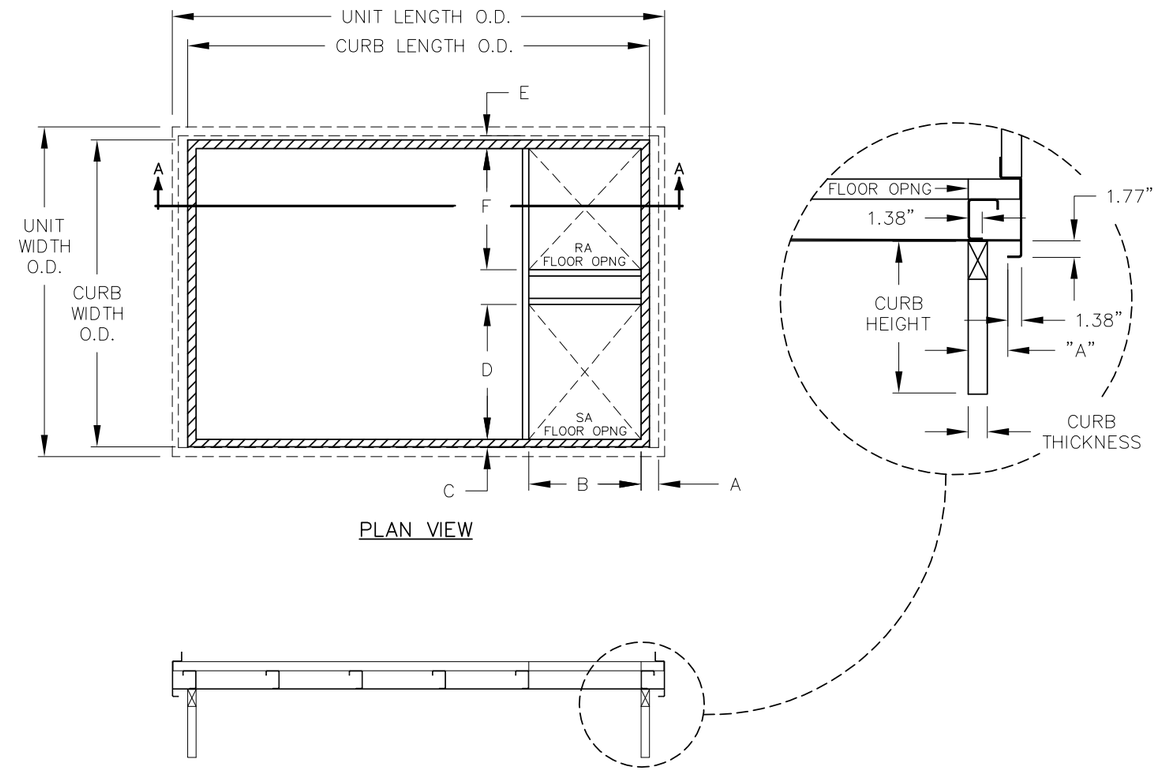

PLAN VIEW

SECTION A–A

UNIT SIZE	MODEL	DIMENSION (INCHES)								
		UNIT O.D. (L x W)	CURB O.D. (L x W)	CURB HEIGHT	A	B	C	D	E	F
ELT-060	PRE-CONDITIONER	91.4 x 67.5	86.3 x 62.1	14, 18 or 24	4.0	25.0	2.6	27.0	6.7	22.0
ELT-075	PRE-CONDITIONER	109.7 x 73.4	104.6 x 68.3	14, 18 or 24	3.9	25.0	2.5	30.0	4.7	26.0
ELT-090	PRE-CONDITIONER	111.2 x 79.0	106.1 x 73.9	14, 18 or 24	3.9	27.0	3.0	32.0	5.0	30.0
ELT-110	PRE-CONDITIONER	123.1 x 83.2	118.0 x 83.9	14, 18 or 24	3.9	30.0	2.4	35.0	3.5	33.0
ELT-130	PRE-CONDITIONER	130.0 x 89.0	124.9 x 83.9	14, 18 or 24	3.9	33.0	3.9	35.1	3.9	35.1

FIGURE 10

MOUNTING DETAILS

CURB SUPPORT

ELT-C, ELT-CR, ELT-H, ELT-HR, ELT-CH, ELT-CHR, ELT-HC, ELT-HCR, ELT-CGB, ELT-CGBR

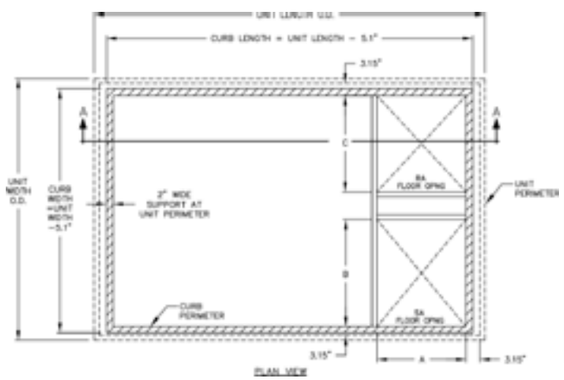

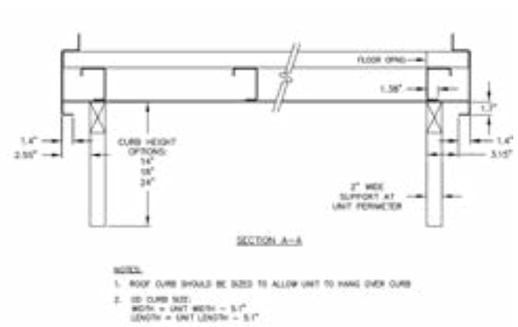

MOUNTING DETAILS

PAD INSTALLATION

ELT-C, ELT-CR, ELT-H, ELT-HR, ELT-CH, ELT-CHR, ELT-HC, ELT-HCR, ELT-CGB, ELT-CGBR

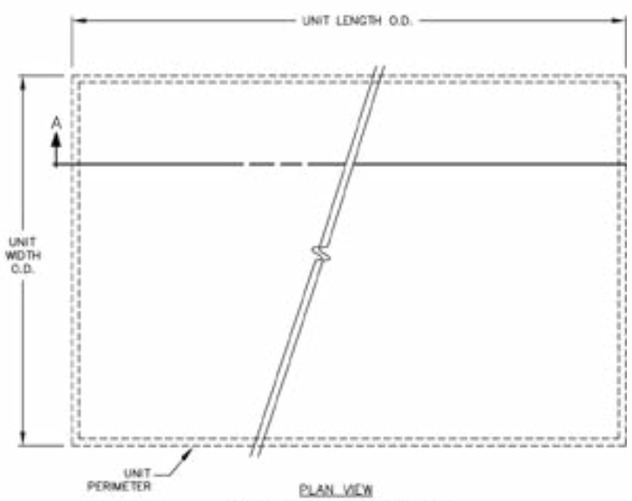

PLAN VIEW
TYPICAL UNIT WITH HOUSEKEEPING PAD OR STRUCTURAL GRID SUPPORT

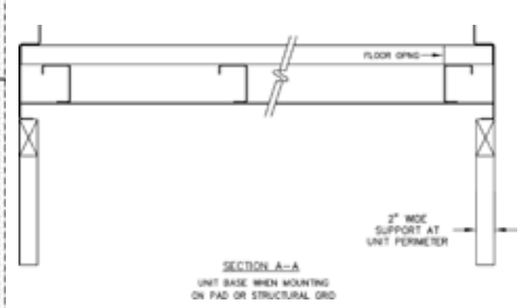

SECTION A–A
UNIT BASE WHEN MOUNTING ON PAD OR STRUCTURAL GRID

UNIT SIZE	MODEL	DIMENSION (INCHES)					
		UNIT O.D. (L x W)	CURB O.D. (L x W)	CURB HEIGHT OPTIONS	A	B	C
ELT-053	ELT-C, ELT-CR	178.8 x 75.0	173.7 x 69.9	14, 18 or 24	22.0	32.8	23.5
	ELT-H, ELT-HR	154.5 x 75.0	149.4 x 69.9				
	ELT-CH, ELT-CHR	202.3 x 75.0	197.2 x 69.9				
	ELT-HC, ELT-HCR	178.8 x 75.0	173.7 x 69.9				
	ELT-CGB, ELT-CGBR	237.1 x 75.0	232.0 x 69.9				
ELT-085	ELT-C, ELT-CR	178.8 x 89.0	173.7 x 83.9	14, 18 or 24	22.0	39.6	30.6
	ELT-H, ELT-HR	154.5 x 89.0	149.4 x 83.9				
	ELT-CH, ELT-CHR	202.1 x 89.0	197.0 x 83.9				
	ELT-HC, ELT-HCR	178.8 x 89.0	173.7 x 83.9				
	ELT-CGB, ELT-CGBR	245.9 x 89.0	240.8 x 83.9				
ELT-120	ELT-C, ELT-CR	186.8 x 93.0	181.7 x 87.9	14, 18, 24	22.0	41.5	32.8
	ELT-H, ELT-HR	161.6 x 93.0	156.5 x 87.9				
	ELT-CH, ELT-CHR	210.1 x 93.0	205.0 x 87.9				
	ELT-HC, ELT-HCR	186.8 x 93.0	181.7 x 87.9				
	ELT-CGB, ELT-CGBR	254.2 x 93.0	249.1 x 87.9				
ELT-150	ELT-C, ELT-CR	190.8 x 102.0	185.7 x 96.9	14, 18, 24	26.0	45.1	38.1
	ELT-H, ELT-HR	166.4 x 102.0	161.3 x 96.9				
	ELT-CH, ELT-CHR	214.1 x 102.0	209.0 x 96.9				
	ELT-HC, ELT-HCR	190.8 x 102.0	185.7 x 96.9				
	ELT-CGB, ELT-CGBR	256.1 x 102.0	253.0 x 96.9				
ELT-175	ELT-C, ELT-CR	190.8 x 113.0	185.7 x 107.9	14, 18, 24	26.0	50.8	41.0
	ELT-H, ELT-HR	166.4 x 113.0	161.3 x 107.9				
	ELT-CH, ELT-CHR	214.1 x 113.0	209.0 x 107.9				
	ELT-HC, ELT-HCR	190.8 x 113.0	185.7 x 107.9				
	ELT-CGB, ELT-CGBR	263.0 x 113.0	257.9 x 107.9				
ELT-200	ELT-C, ELT-CR	190.8 x 113.0	185.7 x 107.9	14, 18, 24	26.0	50.8	41.0
	ELT-H, ELT-HR	166.4 x 113.0	161.3 x 107.9				
	ELT-CH, ELT-CHR	214.1 x 113.0	209.0 x 107.9				
	ELT-HC, ELT-HCR	190.8 x 113.0	185.7 x 107.9				
	ELT-CGB, ELT-CGBR	263.0 x 113.0	257.9 x 107.9				

FIGURE 11

TRUE 3Å®, FUSION 3Å® AND FUSION® WHEELS

WHEEL STARTUP

All necessary energy recovery wheel components have been installed at the factory and tested for proper operation prior to shipping. (See the **ENERGY RECOVERY WHEEL OWNER'S MANUAL** for complete details on wheel start-up maintenance).

1) Pump grease into the two rotor bearing grease fittings using a high quality NLGI No. 2 grease. (See **FIGURE 12**)

FIGURE 12. Pump grease into two rotor bearing grease points, one on each side of the rotor.

2) Remove the shipping restraint located on the supply air side of the wheel near the drive motor. Remove all bolts and discard. The shipping restraint prevents the rotor from turning during shipment. (See **FIGURES 13** and **14**)

FIGURE 13. Shipping restraint for flat rim wheel.

FIGURE 14. Shipping restraint for ribbed rim wheel.

3) Turn rotor by hand in the direction indicated by rotation arrows to verify that the rotor does not bind (see **FIGURE 15**). If binding occurs in a new unit, it is usually caused by the labyrinth seal or freight damage. To adjust the seals, loosen the screws holding the seal clips in place, adjust the seal so it just contacts the surface of the wheel/rim, and then re-tighten the screws.

FIGURE 15. Rotate the rotor at least three turns in the direction indicated by the rotation arrow.

4) Inspect the rotor visually. It should be well centered in its casing and should not tilt in any one direction. If alignment is not suitable, please contact FläktGroup SEMCO.

5) Inspect the bearing bolts, rim bolts and the Allen screws on the bearing collar to ensure that all are tight (see **FIGURE 16**). Tighten any loose screws and bolts according to torque values described in **FIGURE 17**.

FIGURE 16. Inspect the bearing collar to ensure all bolts and screws are tight.

FASTENER TYPE		TORQUE ft-lb.
Bearing bolts	1/2"	50
	5/8"	80
	3/4"	120
Bearing set screws		15
Rim bolts		35
Taper locks (bushing bolts)		15

FIGURE 17. Torque values for various bolts

SEAL ADJUSTMENT

The True 3Å® wheel uses a specially designed, four-pass labyrinth seal. Although the seal itself never touches the unit's rotor, it controls the air that attempts to pass between the seal and the rotor. The labyrinth seal causes air to expand repeatedly in the space between the seal and rotor, forming eddy currents. These currents create a pressure loss that forms an effective seal, therefore limiting air bypass and allowing the rotor to perform its heat transfer function (See **FIGURE 18**). Maintaining correct seal adjustment is vital to the effective operation of the unit.

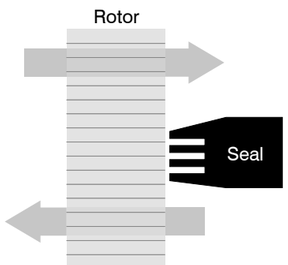

FIGURE 18. Air flowing between the rotor and labyrinth seal expands repeatedly, creating a pressure loss that forms an effective seal and prevents air from bypassing the rotor. The labyrinth seal never touches the rotor.

1) Every rotor has a high point on the face of the wheel. Locate the high point visually by rotating the rotor by hand and note the point at which it is closest to the seal.

2) Place the gauge at the rotor's high point and move the rotor slowly by hand. Adjust the seal at locations where the seal does not meet gauge depth by loosening the screw holding the nearest clip. After setting the seal to the correct gauge depth, tighten the screw. (See **FIGURES 19 and 20**.)

FIGURE 19. Loosen clip and insert gauge. Adjust seal to correct gauge depth.

FIGURE 20. Tighten the screw.

3) Pay special attention to the seals across the wheel partition, which could possibly bind causing wheel damage.

4) Once the seals are set, needs to be applied to the following areas as shown in **FIGURES 21-23** to prevent leakage through any gaps. Apply on the weather side of the wheel to the face seal at each end where it contacts the perimeter seal. On building side of the wheel apply to the purge seal at the perimeter and where the seal ends near the center of the wheel. the face seal next to the purge where the seal meets the base of the purge and at the perimeter.

FIGURE 21. Caulk gap where purge seal abuts sheet metal end wall at the base of the purge.

FIGURE 22. Purge seal where it meets perimeter seal.

FIGURE 23. On the weather side of the wheel where face seal meets perimeter seal at both ends.

PURGE ADJUSTMENT

As the wheel turns from the exhaust to the supply air stream, a small amount of the outdoor air is sent through the flutes for the media to clean it as it passes the purge (See **FIGURES 24** and **25**). If exhaust air were permitted to mix with clean supply air, cross-contamination would occur. The small amount of outdoor air directed through the purge prevents this from happening.

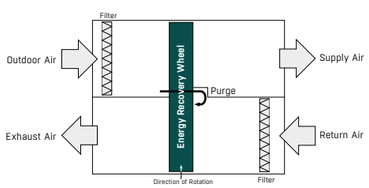

FIGURE 24. The purge uses outdoor air to clean the media before the rotor turns into the outdoor air stream.

FIGURE 25. The purge section on the wheel.

The purge utilizes the pressure differential between the outdoor and return air streams to clean the media before the rotor turns into the outdoor air stream (See **FIGURE 26**).

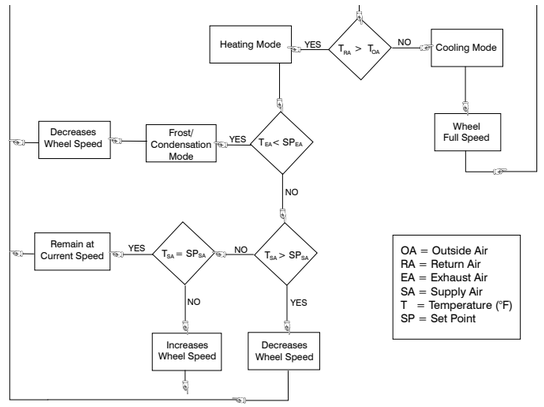

FIGURE 26. Operational flow chart for proper temperature and wheel speed operation.

Adjusting the purge to local conditions requires that the air pressure be measured in the two crucial air streams, the outdoor and return air streams. Install a pressure tap close to the rotor surface in the outdoor and return air stream as indicated in **FIGURE 26**. Connect the pressure taps to a differential pressure gauge and record the difference.

For proper operation, the pressure difference between the outdoor and the return air stream (POA - PRA) must be greater than 1 inch water gauge. If the pressure difference is less than 1 inch w.g. consult FläktGroup SEMCO.

Referring to **FIGURE 28** determine the range where the measured pressure difference falls. For example, if you measure a pressure difference of 1.25 in. w.p., then the appropriate range would be 1.0 - 1.5.

Read the corresponding purge index setting in the same row. In our example, the corresponding purge index setting is 6.

After determining the difference between the return and outdoor pressures, refer to the drawing below to determine the correct purge index.

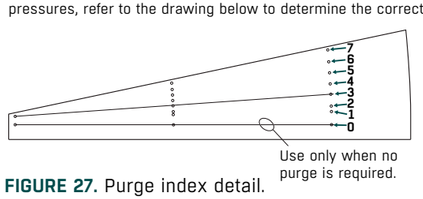

FIGURE 27. Purge index detail.

PURGE INDEX SETTING		
PRESSURE DIFFERENCE RANGE (in. w.g.)	ENTHALPY WHEEL	SENSIBLE WHEEL
0.00 - 0.99	Consult SEMCO	
1.00 - 1.5	6	3
1.6 - 2.0	5	3
2.1 - 3.0	4	2
3.1 - 6.0	3	2
6.1 - 10.0	2	1
> 10.0	1	1

FIGURE 28. Purge index setting.

TUBE FRAME WHEEL PURGE ADJUSTMENT

1) Remove the adjusting bolt(s) from the line of holes at the top (and middle if applicable) of the purge (see **FIGURE 29**).

FIGURE 29. To adjust the purge, remove the adjusting bolt.

2) Loosen the bottom pivot bolt (see **FIGURE 30**)

FIGURE 30. After removing the adjusting bolt(s), loosen the bottom pivot bolt.

3) Close or open the wiper located between the wheel and the purge plate.

4) Locate the appropriate index hole and align the purge wiper. The first hole from the rotor center line is "0," the second is "1,"and so on.

5) Tighten both the adjusting bolt and the pivot bolt after setting the purge. Be sure to reseal the purge with silicone caulk after completing the adjustment (see **FIGURE 31**). A bead of caulk should be laid where the purge wiper joins the purge front plate.

FIGURE 31. After adjusting the purge and tightening the adjusting and bottom pivot bolts, apply silicone caulk where the purge wiper joins the purge front plate.

6) Check the seal adjustment on the rim and the purge wiper. The seal should be adjusted as described on **PAGE 15**).

SHEET METAL FRAME PURGE ADJUSTMENT

1) Remove the screws that connect the purge plate assembly to the support beam, as shown in **FIGURE 32**.

FIGURE 32. Remove screws from Sheet Metal Frame purge section.

2) After screws are removed, slide assembly out from behind support beam as shown in **FIGURE 33**.

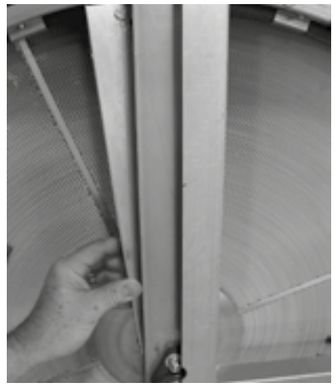

FIGURE 33. Sheet Metal Frame purge section removal.

3) After removing the assembly, loosen the pivot bolt (see **FIGURE 34**) and remove the adjusting bolt (see **FIGURE 35**).

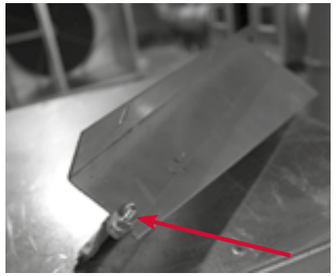

FIGURE 34. Purge wiper pivot bolt.

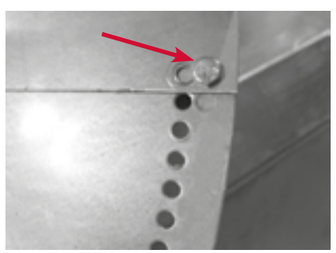

FIGURE 35. Purge wiper adjusting bolt.

4) With the adjusting bolt removed, adjust the purge wiper to the appropriate index hole and re-install the adjusting bolt, using a thread locking compound. The hole closest to the bend is 0," the second is 1" and so on.

5) Slide the assembly back under the support beam and re-attach the assembly.

UWC/UWCH WHEEL

WIRING QUICK CONNECT

The UWC wheels are supplied with a quick disconnect wiring harness that allows for easy wheel cassette removal for cleaning and proper maintenance. (see **FIGURE 36**).

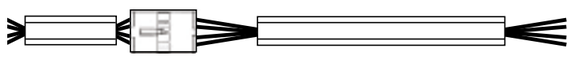

FIGURE 36. 3 Phase Wiring Connector

WHEEL STARTUP

1) All necessary energy recovery wheel components have been installed at the factory and tested for proper operation prior to shipping.

2) Turn rotor by hand in the direction indicated by rotation arrows to verify that the rotor does not bind (see **FIGURE 12** on **PAGE 14**). If binding occurs in a new unit, it is usually caused by the seal or freight damage. To adjust the seals, loosen the screws holding the seal in place, adjust the seal so it just contacts the surface of the wheel/rim, and then re-tighten the screws.

3) Inspect the rotor visually. It should be well centered in its casing and should not tilt in any one direction. If alignment is not suitable, contact FläktGroup SEMCO.

4) Inspect the bolts and the screws to ensure that all are tight. Tighten any loose screws and bolts.

BELTS

The wheel drive system utilizes a PowerTwist Plus™ V-belt. Periodic adjustment of the belt will be necessary. We suggest the belt be checked for sufficient tension at a minimum of once every six months. Take care to follow the directions on the following pages for instructions on measuring, assembling, and installing PowerTwist™ Plus V-Belts.

SEALS & PURGE ADJUSTMENT

Seals and purge are set at the factory prior to shipping.

REMOVAL

1) Turn off power to the unit.

2) Remove the plug panel door from the unit by turning handles to open them.

3) Unplug the power leads to the wheel drive motor. Also, remove the wheel rotation sensor if equipped at this time. (see **FIGURE 37**)

4) Remove the wheel by pulling out the side of the unit. Mechanical assistance may be needed.

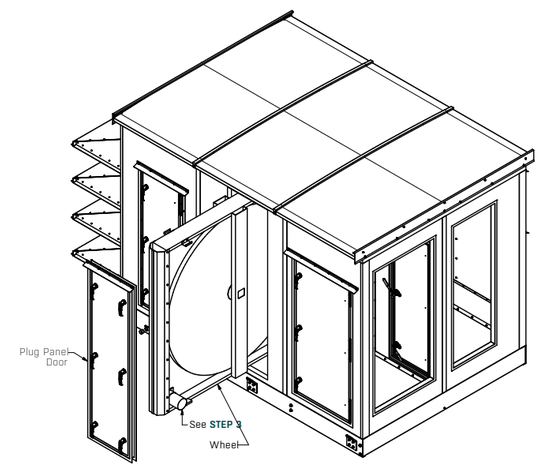

FIGURE 37

RE-INSTALLATION

1) Slide the wheel back into the unit making sure it is completely seated against the gaskets on the back wall.

2) Reattach the wheel rotation detector sensor (if applicable), and the wheel motor.

3) Replace the plug door.

4) Return power back to the unit.

EC FANS

All necessary system fans and fan motors are installed at the factory. However, before attempting to operate them, a pre-startup inspection is recommended.

1) Make sure all power to the fan motors is off.

2) When checking the fan, be sure to:

   A) Check fan bolts and mountings for tightness. Tighten any loose screws and bolts.

   B) Rotate the impeller by hand; it should turn freely. If not, check for obstructions and contact FläktGroup SEMCO.

   C) Ensure that the fan wheel, drives and fan interiors are clean and free of debris.

3) Check supply fan motor mountings for tightness to ensure that they have not loosened during transit or on-site installation. If necessary, tighten loose mountings. Turn motor shaft by hand to verify that it turns freely.

FIGURE 38. Wall mounted EC fan

OPERATION

1) After completing inspection checks on fans, turn power on then off quickly. Power should be on just long enough to start fan rotation.

2) If fans start rotating in the wrong direction (see arrow on the blower) turn off power immediately. To correct rotation, lock out power to the unit feeder, and switch any two line power wires.

3) Using an amp probe or amp meter, check the actual operating current of the motor to make sure it is not being overloaded or underpowered. The operating current must not exceed the nameplate current.

4) Allow the assembly to run for about an hour. During this time, listen for any unusual sounds. To correct noise problems, see **TROUBLESHOOTING** on **PAGE 23**.

FAN REMOVAL

1) Turn off the power to the unit.

2) Unhook the wiring from the motor.

3) Loosen the nuts holding the fan to the wall. (4-8 nuts)

4) Before removing the nuts and washers, make sure that the fan is supported.

5) Remove the nuts, washers and fan.

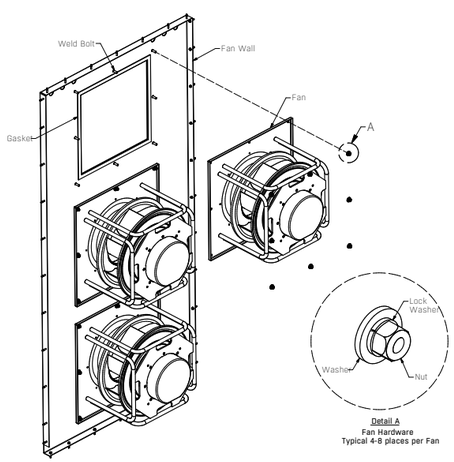

FIGURE 39

FAN RE-INSTALLATION

1) Place fan onto weld studs, making sure to support the fan.

2) Install nuts and washers, then tighten.

3) Hook wiring back up per the electrical schematic.

4) Turn the power to the unit back on.

DAMPERS

Although the dampers have been installed and checked at the factory, a pre-startup inspection is recommended to be sure that nothing has become detached or damaged during shipment or on-site installation.

INSPECTION

1) Check blade rotation clearance. Verify that blades open and close properly and rotate sufficiently. If they do not, check for obstructions, broken or bent blades, or loose linkage. Correct or repair as necessary (See **FIGURE 40**).

FIGURE 40. Be sure that damper blades open and close properly and have sufficient rotation clearance.

2) Be sure that actuator arms and bars connecting damper motors to control rods or shafts are tight. (See **FIGURE 41**).

FIGURE 41. Damper actuator

3) The dampers are controlled by electric motors. Make sure that wiring is complete. Check the wiring diagram on the motor.

4) Turn on power and observe whether or not the controls trigger dampers correctly. Be sure that limit switches close when blades are open and open when blades are closed.

COILS

Heating and/or cooling coils can be ordered with the energy recovery system. All necessary heating and/or cooling coils have been installed at the factory. However, it is advised to do a brief pre-startup inspection before operating.

INSPECTION

Inspect all pipe connections to verify they are tight and that no damage has occurred during transit or on-site installation.

- Hot water coils – Check the freeze protection thermostat for proper operation so that it will function to prevent freeze-ups.
- During initial operation, make sure that condensate flows back to the headers. Check for leaks.
- Hot water coils are designed to operate pressures to 150 psig, and temperatures to 366°F. Check for leaks during initial operation.
- Cooling coils are designed to withstand pressures to 200 psig. During initial operation, check for leaks.

SUPPLEMENTAL HEATERS

For units equipped with supplemental heaters, a minimum clearance of 36 inches (914 mm) must be maintained from the side of the unit featuring the control panel to combustible surfaces, per the National Electrical Code (NEC).

There is a specified minimum clearance of 6 inches (152 mm) on the back facing side of the unit. The minimum clearance should be followed, unless the amount specified by the local building code is greater.

GAS BURNERS

Gas burners would be factory installed and run tested aluminum, corrosion resistant, air heat burners. The burners allow the unit to treat outdoor, incoming air with uniform, odorless and smokeless flames. For start-up and adjustment instructions please refer to the **MANUFACTURER'S TECHNICAL INFORMATION GUIDE** included with the unit or contact FläktGroup SEMCO for more information.

AIR FILTERS

Air filters for the ElitePro are boxed, tagged and shipped loose inside the system for field installation. This minimizes any risk for filter damage during transit. The air filters must be installed prior to startup or the warranty could be voided.

Throughout the operating life of the system, it will be necessary to replace filters as they accumulate dirt from the air stream.

The system is equipped with two pressure differential gauges. As air filters accumulate dirt, the pressure differential will rise.

Filters will be standard MERV 8 or optional MERV 13, air filters will be 2" thick, pleated, disposable type. Each filter will consist of a non-woven cotton and synthetic fabric media, media support grid, and enclosing frame.

The filter media will have an average efficiency of 80% on ASHRAE test standards. The filter is listed by Underwriters' Laboratories as Class 2. A bank of galvanized holding frames will be arranged for upstream access.

Additional filters for outdoor applications will be mounted in the outside air hood, and shall be 1" thick permanent aluminum washable type.

WHEN TO REPLACE FILTERS

It is recommended that filters be changed when the pressure differential gauge reaches the final resistance rating illustrated in **FIGURE 35**. Experience with the new system may suggest changing filters at a slightly higher or lower reading. Depending upon the total volume of air required in the building, altering the replacement differential may be necessary. But waiting to change filters when the pressure differential reaches or approaches a higher-than-recommended figure would mean using packed air filters that seriously reduce airflow.
For air filter replacement, a rigid, cell-type filter that matches the specifications shown in the **PRE-FILTER AND FINAL FILTER CAPACITY AND RESISTANCE TABLES** is recommended.

PRE-FILTER CAPACITY AND RESISTANCE DATA									
FILTER DEPTH	NOMINAL SIZE (INCHES)	ACTUAL SIZE (INCHES)			CAPACITIES (CFM)		RESISTANCE @ CAPACITY (INCHES W.G).		
		WIDTH	HEIGHT	DEPTH	MEDIUM	HIGH	MEDIUM	HIGH	FINAL
2”	12x24x2	11.38	23.38	1.88	500	1000	.08	.28	.90
	24x24x2	23.38	23.38	1.88	1000	2000	.08	.28	.90

FIGURE 42. Pre-filter capacity and resistance data

UNIT/TAG	SA FILTER 2" MERV 8 OR MERV 13		RA FILTER 2" MERV 8 OR MERV 13	
	QUANTITY	SIZE	QUANTITY	SIZE
ELT-053	4	16x25	1	16x25
	—	—	2	20x25
ELT-060	6	15x20	6	15x20
ELT-075	2	16x20	2	16x20
	1	16x24	1	16x24
	2	18x20	2	18x20
	1	18x24	1	18x24
ELT-085	2	20x20	2	16x20
	4	20x24	4	16x25
ELT-090	3	16x24	3	16x24
	3	20x24	3	20x24
ELT-110	3	20x24	3	20x24
	3	24x24	3	24x24
ELT-120	2	20x20	6	16x20
	4	20x24	2	16x25
	2	24x24	—	—
ELT-130	8	20x24	8	20x24
ELT-150	5	20x24	10	20x20
	5	24x24	—	—
ELT-175	10	16x20	10	20x24
	5	18x20	—	—
ELT-200	15	20x20	15	18x20

FIGURE 43. Quantity and size of filters

TROUBLESHOOTING: FANS, DRIVE BELTS, AND MOTORS

PROBLEM	POSSIBLE CAUSES	SOLUTION
VIBRATION	Out of balance fan motor	Check for dirt. If dirty, clean motor.
	Loose mounting bolts	Tighten bolts
	Fan operating in stall or unstable flow	Make sure system is operating at design static pressure and design flow rates
NOISE, MOTORS	Supply voltage is high or inconsistent	Check supply voltage with voltmeter.
		Correct supply voltage if necessary.
POOR AIR PERFORMANCE	Incorrect fan rotation	Rotation can be changed on 3-phase motors by reversing any 2 motor leads.
	Abrupt turn in duct close to fan discharge or air pre-spin caused by elbows at fan inlet.	Install turning vanes or elbow splitters in duct. If more change is needed, discharge position may have to be changed.
	If fan has inlet volume control, is it properly installed?	Inlet volume control must be installed with pre-spin of the air in direction of wheel rotation when control is partially closed.
	Devices for air modulation closed or plugged.	Open or unplug
	Clogged filters	Replace filters.
	Fan power draw unexpectedly low.	• Correct air pre-spin into fan inlet. • Resistance to air flow is much higher than calculated; check for closed damper or other duct obstructions; recheck duct layout.
	Fan power draw unexpectedly high.	• Fan speed may be too high. Fan may operate without duct work at low resistance so too much air flows. • Fan may be handling ambient air instead of intended hot, less dense air. • Fan may be running backward; check and correct if necessary.
	Damaged or dirty fan or system.	Clean fan or system, or replace damaged parts.
AIR LEAKING AROUND WHEEL	Wheel seals need adjustment.	Loosen screw and push brush seal towards face. Re-tighten.
MOTOR PROBLEMS	Incorrect wiring	Correct
	Fan speed too high	Check fan speed against submittal.
	Parts improperly installed or binding	See “Inspection” at beginning of this section. Re-check and correct if necessary.
	Protection devices may be improperly sized	Check against submittal.

MAINTENANCE

It is recommended that the unit be visually inspected daily. Taking a few moments each day to make sure that the unit is functioning will save many future hours, dollars and headaches. Each day, ensure that:

- The rotor is rotating under power;
- The motor is running;
- All devices are on and operating (the variable frequency controller, temperature controller, and rotation detector).

All other maintenance activity should be conducted monthly, quarterly, semiannually or annually as described in this manual. All essential maintenance services are summarized in the **MAINTENANCE SCHEDULE** below.

MAINTENANCE SCHEDULE			MONTH				
COMPONENT	SERVICE	STARTUP	1	3	6	9	12
FAN	Check/clean wheel	x		x	x	x	x
FAN MOTORS	Clean motors				x		x
	Inspect motor connections				x		x
	Check operating current				x		x
	Check motor bolt tightness				x		x
DAMPERS	Check rotor blade clearance	x					
	Inspect damper for dirt and foreign matter			x	x	x	x
	Inspect dampers seals for deterioration			x	x	x	x
FILTERS	Replace based on pressure differential						
TRUE 3Å®, FUSION 3Å AND FUSION WHEELS	Rotor bearing lubrication	x			x		x
	Bearing bolt tightness	x					
	Bearing set screw tightness	x	x		x		x
	Sheave set screw tightness	x	x		x		x
	Motor and gear reducer bolt tightness	x	x		x		x
	Belt wear	x			x		x
	Adjust seals	x	x	x	x	x	x
	Rotor runout and flatness*	x		x	x	x	x
	Media tightness	x	x	x	x	x	x
	Check/recalibrate temperature controller						x
	Check/clean variable frequency control						x

***NOTE:** Rotor runout and flatness checks should be accomplished annually after the first year of operation.

MAINTENANCE: COILS

Heating and cooling coils function at peak efficiency when clean and free of foreign matter. Frequent visual inspections should be made, and any built up dirt and foreign matter should be removed. A fin comb may be required to remove matter entangled in fins or coils (see **FIGURE 44**), but flushing with water under normal local pressure will remove most particulates.

FIGURE 44. A fin comb may be used to remove matter entangled in fins, as well as to straighten fins. But normally flushing coils with water under normal pressure will remove most matter.

- An acid or alkaline coil cleaner is recommended every one or two years, depending on the degree of oxidation, to thoroughly clean and brighten coils and fins.
- Local water conditions may make it necessary to treat chilled water systems, hot water systems and steam systems to control corrosion, sludge and/or metal oxides. In some water supplies, scale removers and inhibitors may also be required.
- Cooling coils — if water in the system will be exposed to outdoor temperatures that are below freezing, either drain the system before temperatures dip below 32˚F, or add glycol to the system to prevent freezing.

MAINTENANCE: DAMPERS

- Every 3 months, inspect dampers, arms, bars, and control rods and shafts for dirt and other foreign matter that would impede normal movement and prevent blades and seals from seating properly. Clean as necessary.
- Inspect seals every three months to be sure that none have pulled loose or deteriorated. If replacement is required and the seal can be replaced, remove it and replace with a new seal of the same shape, design and material used originally. Do not use a different size or shape. In some instances, the seal may not be replaceable and it may be necessary to replace the entire blade.
- No lubrication required. Damper shafts utilize non-lubricating bearings.

MAINTENANCE: TRUE 3Å®, FUSION 3Å® AND FUSION® WHEELS

ROTOR BEARING

The rotor bearing is greased prior to shipment, however, it is recommended to lubricate the bearing again just prior to start-up. A bearing's lubrication cycle is dependent upon the range of temperatures normally experienced by a unit in a day. For a typical temperature range between -20°F and 130°F, lubricating the bearing every six months is adequate. If the unit temperature range is higher, between 130°F and 170°F, lubrication every three months is recommended. For environments that experience temperatures above 170°F, please contact FläktGroup SEMCO.

Grease should be pumped into the two bearing grease points — one located on each side of the rotor (see **FIGURE 45**). A high grade NLGO No. 2 grease is recommended.

FIGURE 45.

NOTE: The average lifespan of a rotor bearing is twenty years. If the rotor bearing requires replacement, contact FläktGroup SEMCO for detailed Instructions

BEARING SET SCREWS

1) The bearing set screws should be checked periodically for tightness. A bearing set screw is located on each side of the rotor (see **FIGURE 46**). Recommended checking frequency; start-up, one month after start-up and every six months thereafter.

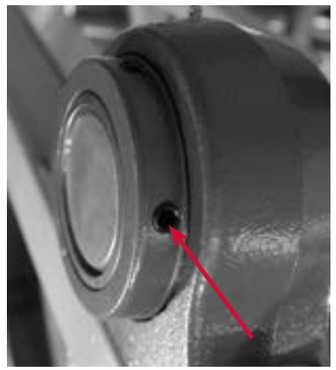

FIGURE 47. The bearing set screws, one on each side of the rotor, should be checked for tightness every six months.

2) The bearing set screws should be torqued to 15 ft-lbs.

MOTOR

The motor has deep grooved, double-shielded bearings with sufficient lubricant packed into the bearings by the manufacturer for "life lubrication." The initial lubricant is supplemented by a supply packed into larger reservoirs in the end shield at the time of assembly. No grease fittings are provided as the initial lubrication is adequate for up to ten years of operation under normal conditions. No lubrication is required.

VARIABLE FREQUENCY CONTROLLER

1) The variable frequency controller is cooled by air flowing through the heat sink slots. The slots must never be allowed to become obstructed by dirt or foreign material. Periodically, check and clean the heat sink slots with compressed air or a vacuum. Airflow must never be restricted in any way.

2) Check and clean the variale frequency controller annually.

SEALS

Properly adjusted seals are an important element for effective and efficient unit operation. The seals must be adjusted to gauge depth prior to the start-up. Subsequently, seals should be checked in several places with the seal gauge after the first month of operation, and every three months thereafter.

NOTE: If the seals give any signs af the binding the rotor, they should be adjusted immediately. To adjust the seals, see the complete instructions on **PAGE 15**. The rotor should be checked periodically to ensure the continued integrity of the brushings, shaft, spokes, media and rim.

THE ROTOR AND MEDIA

1) CHECKING FOR ROTOR RUN OUT

- Shut off the unit
- Check to see if any media has loosened from the spokes.
- Check to see that the rims are securely bolted to the spokes.
- Are the spokes tight?
- Is the rotor well centered?
- Examine the shaft closely for any indication that the bushings have moved.
- Note whether or not the rotor has moved closer to the seals on one side of the unit or the other. Has the rotor moved closer to the seals at the right or the left of the rotor or has it m oved closer to the top or bottom? If yes, please contact FläktGroup SEMCO.
- Check the rotor for flatness — using a machinist's scale or a dial indicator, measure the distance between the media and a main support. Rotating the rotor by hand, measure distances at three positions on each media wedge and in the center of each spoke (see **FIGURE 45** on **PAGE 25**). All measurements sghould be within an 1/16 of an inch, if not contact FläktGroup SEMCO.

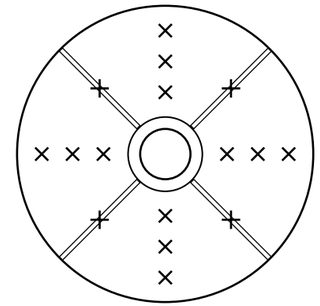

FIGURE 45. To check the rotor for flatness, measure the distance from main frame support to media and spokes at location marked by an "X" in this illustration. If the rotor contains more than four wedges, the same measurement locations should be used for the additional wedges and spokes.

- Rotor run out checks should be conducted at start-up, 3 months, 6 months and 12 months of operation, and at least once a year thereafter.

2) CHECKING FOR MEDIA TIGHTNESS

- Shut off the unit.
- Select an area of media near the hub and place your hands flat against the media.
- On either side attempt to move the media up and down. Perform this test on each wedge of media.
- If any movement is detected contact FläktGroup SEMCO **IMMEDIATELY**.
- Check for media tightness at start-up, after the 1st month of operation and every 3 months thereafter.

3) MEDIA CLEANING

- The FläktGroup SEMCO True 3Å© energy recovery wheel has been designed so that a laminar flow is maintained within the transfer media at all operating conditions. This means that the air and all other particles in the air stream pass straight through the wheel. Due to the laminar flow profile through the True 3Å©, any collection of dust or particulate matter will occur at the entering and leaving edges of the transfer media. Such buildup can usually be vacuumed, purged with compressed air, or wiped from the rotor surface. In rare cases a more thorough cleaning is required. In this case low temperature steam or hot water and detergent may be used.

ENERGY RECOVERY WHEEL CLEANING PROCEDURE

REQUIRED TOOLS AND MATERIALS

- Air compressor capable of sustaining 90 psi
- Air spray nozzle without OSHA relief
- Wet dry vacuum
- Simple Green® cleaner, approximately eight 1-quart bottles per average size wheel.
- 2 -3 soft 2" sash paint brushes
- Several large canvas drop cloths, and materials to hang cloth vertically
- Step ladder 6-8 ft.
- Stand lighting
- Safety goggles

CLEANING PROCESS

1) Turn off the air handler and wheel (wheel must be stopped and airflow off).

2) Liberally spray Simple Green© cleaner on a small section of media (onto the dirty return side) and let it foam, softening debris and dirty residue.

3) After the cleaning liquid is absorbed into the residue, use approximately 90 psi of compressed air and blow from the opposite side (exhaust side), catching the blown off material on pre-placed drop cloths.

4) Next, lightly sweep the soft sash brush across the face of the media to remove any leftover residue or film, which should leave a clean media edge. Use stand lighting to shine light on one side of the wheel, so that you can look through the other side and check your progress. The wet-dry vacuum can be used to clean up any residue that may have been blown off, that missed the drop cloths.

5) Cleaning the True 3Å® is a slow process, taking one person 8+ hours to clean an average sized wheel. To minimize down time, a wheel could be cleaned a few sections at a time, so that the unit could be turned on when required, then shut down later, continuing to clean the remaining sections.

DRIVE BELTS

The belts should be checked periodically for wear and correct belt tension after start-up and semi-annually thereafter.

BELT TENSION DETAIL

The tensioner must be positioned so that after final tensioning it is at no less than a 45 degree angle with the centerline of the mounting bracket. Anything less will limit the effectiveness of the tensioner and may cause premature belt failure. If, due to belt wear, the standard mounting position and belt length cannot meet this requirement, the belt tensioner may need to be moved on the mounting bracket.

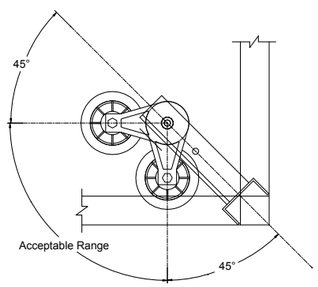

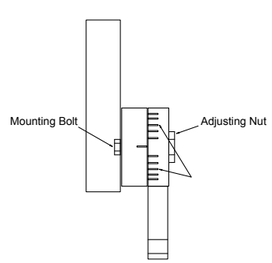

FIGURE 46.

TENSIONER ADJUSTMENT

1) Loosen the tensioner by accessing the mounting bolt from the back side of the mounting bracket.

2) Adjust the tensioner base by using a wrench on the adjusting nut to load the tension spring.

3) Tighten until the belt is snug. Then pre-load the tensioner spring to approximately 50% - 75%. Utilize tick marks on the tensioning arm and base as a guide. After final tensioning, the tensioner should be able to move one full tick mark when pulled to compress the spring (removing belt tension).

THIS PAGE WAS INTENTIONALLY LEFT BLANK

WWW.SEMCOHVAC.COM / ELITEPRO SERIES / 20242003

FläktGroup® SEMCO® delivers smart, energy-efficient, air-quality solutions to support every building application. We offer our customers innovative technologies, high-quality products and outstanding performance supported by more than fifty years of accumulated industry experience. The broadest offering on the market and a strong market presence in 65 countries worldwide guarantees that we are always by your side, ready to deliver: Excellence in Solutions.

FläktGroup® SEMCO®
Corporate Headquarters
1800 East Pointe Drive
Columbia, Missouri 65201 USA

573.443.1481

sales.semco@flaktgroup.com

To learn more about FläktGroup® SEMCO® offerings and to contact your nearest representative please visit **www.semcohvac.com**

© Copyright 2024 SEMCO LLC. All Rights Reserved. SEMCO embraces a policy of continuous development and improvement, the right is reserved to supply products which may differ from those illustrated and described in this publication. Specifications are subject to change without further notice. Any FläktGroup SEMCO purchase is subject to FläktGroup SEMCO standard terms and conditions. Certified dimensions will be supplied upon request on receipt of order. SEMCO is a registered Trademark of SEMCO LLC. Other trademarks and logos in this publication may be property of SEMCO, LLC, its subsidiaries or any of its related companies and/or other organizations or individuals. U.S. patented technology: 10,690,358 B2