FläktGroup®

SEMCO®

FLÄKTGROUP SEMCO FV PRE-CONDITIONER SERIES

OWNER'S MANUAL

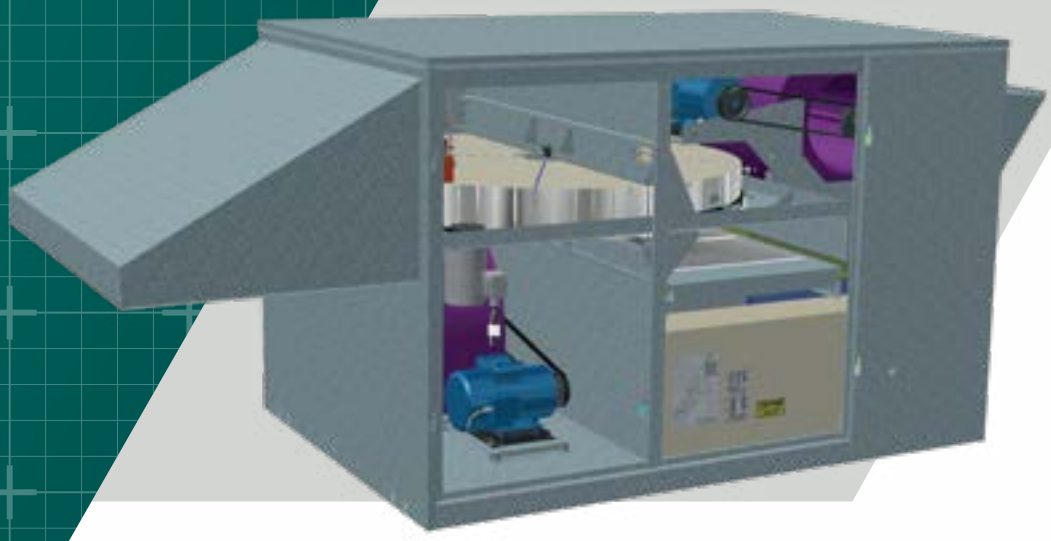

FV-1000
FV-2000
FV-3000
FV-4000
FV-5000
FV-7500
FV-9000

TABLE OF CONTENTS

FV Outdoor Air Pre-Conditioners 1
Definitions 2
Model Description 3
Receiving & Inspection 4
Storage 4
Overall Dimensions 4
Lifting Technique 5
Installation 5
Curb Mounting 7
Unit Configuration 8
Controls 9
- Basic Package 9
- Optional Electric Preheat Frost Control 9
- Optional Stop/Jog Economizer and Wheel Frost Protection 10
- Optional Rotation Detector Sensor 11
- Thermostat Frost Control 11

1Ø Circuit Diagram, FV-1000 through FV-5000 12
3Ø Circuit Diagram, FV-1000 13
3Ø Circuit Diagram, FV-2000 through FV-9000 14
3Ø Circuit Diagram, FV-2000 through FV-9000 Fan w/VFD 15
3Ø 208V Circuit Diagram, FV with Variable Speed Wheel Control, No Fan VFDs 16
3Ø 480/575V Circuit Diagram, FV with Variable Speed Wheel Controls, No Fan VFDs 17
3Ø 208V Circuit Diagram, FV with Variable Speed Wheel Control, with Fan VFDs 18
3Ø 480V Circuit Diagram, FV with Variable Speed Control, with Fan VFDs 19
FV with Variable Speed Wheel Control 20
3Ø Electric Preheat Frost Control Circuit Diagram 21
1Ø Electric Preheat Frost Control Circuit Diagram 21
Electric Preheat Layout 22
Optional Variable Frequency Drive (VFD) 23
Service 28
Maintenance 29
Wheel Cassette 31
Airflow Dampers 33
PowerTwist® Plus V-Belts 36

©1993-2025 SEMCO LLC. All rights reserved.

The information in this owner's manual is furnished for informational use only, is subject to change without notice, and should not be construed as a commitment by SEMCO LLC. SEMCO assumes no responsibility for any errors that may appear in this owner's manual.

No part of this publication may be reproduced, stored in a retrieval system or transmitted, in any form or by any means, electronic, mechanical, recording, or otherwise, without the prior written permission of SEMCO.

The SEMCO logo and SEMCO are registered trademarks of FläktGroup Semco.
PowerTwist Plus® is a registered trademark of Fenner Drives.

FV OUTDOOR AIR PRE-CONDITIONERS

The FläktGroup® SEMCO® FV Series of outdoor air pre-conditioners have been specifically designed to reduce the energy required to heat and cool outdoor air by as much as 80 percent. This unique capability allows both new and existing buildings to benefit from a healthy indoor environment by supplying high amounts of outside air in a very cost-effective manner.

The FV pre-conditioner also allows HVAC systems to effectively and economically accommodate the increased outdoor air quantities recommended by the American Society of Heating, Refrigerating and Air Conditioning Engineers (ASHRAE) Standard 62. This standard guides the amount of ventilation air that should be introduced to a building to achieve acceptable indoor air quality.

The FläktGroup SEMCO FV system is a packaged system which includes supply and exhaust air fans, outdoor and return air filtration, and FläktGroup SEMCO's Fusion 3Å total energy recovery wheel. The Fusion 3Å wheel recovers both sensible (temperature) and latent (moisture) energy. Therefore, it cools and dehumidifies the outdoor air during the cooling season, while heating and humidifying the air in the heating season.

The Fusion 3Å wheel utilizes a fluted aluminum sheet which is coated with a fast-acting, adsorbent desiccant. As the transfer media slowly rotates between the outdoor and exhaust airstreams, the higher temperature air gives up its sensible energy to the aluminum. This energy is then given up to the cooler airstream during the second half of the revolution. (See **FIGURE 1.**)

Just as the temperature is captured and released, so is the moisture. The Fusion 3Å's molecular sieve desiccant coating has a strong attraction to water vapor. Since the opposing airstreams have different temperature and moisture contents, they also have different vapor pressures. This difference provides the driving force that causes the transfer of latent energy.

Through the use of a patented 3Å molecular sieve desiccant coating, Fusion 3Å recovers the moisture from an exhaust airstream without transferring the airborne pollutants contained within the exhaust airstream to the supply airstream. This important and unique feature has been well documented through independent laboratory and field testing. A copy of the report is available upon request.

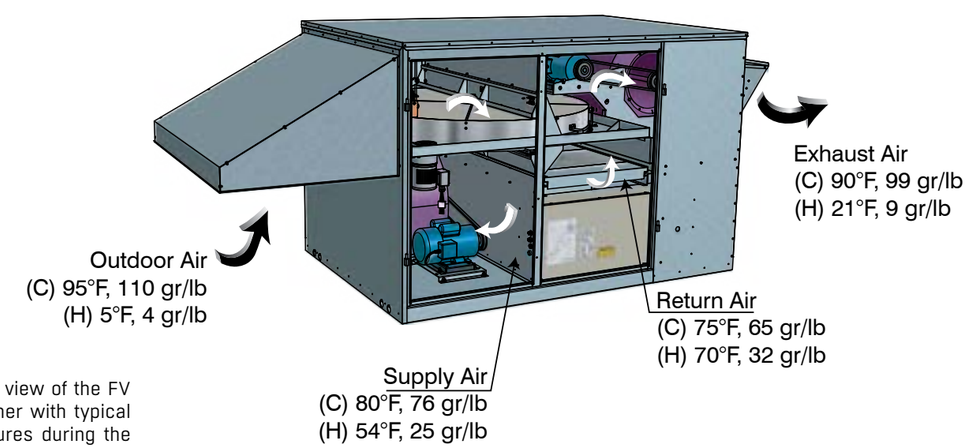

FIGURE 1. An inside view of the FV Series Pre-conditioner with typical operating temperatures during the cooling (C) and heating (H) season respectively.

DEFINITIONS

See **FIGURE 2** on **PAGE 3** for a diagram matching the corresponding components with the numbered definitions below.

1) **ADSORPTION** – The physical bonding of water vapor on the surface of the desiccant.

2) **CASSETTE** – The framework supporting the wheel. (**SEE ALSO WHEEL**)

3) **DESICCANT** – A naturally occurring or man-made material with a high affinity for water vapor. FläktGroup SEMCO uses a highly selective 3Å molecular sieve desiccant material which minimizes cross contamination.

4) **ENTHALPY WHEEL** – A common term used to describe all rotating, wheel-shaped heat transfer devices that exchange sensible (temperature) and latent (water vapor) energy from one airstream to another. The word, enthalpy, means heat content or total heat. The term, enthalpy exchanger, may also be used.

5) **EXHAUST AIR** – The air from indoors that passed through the energy recovery wheel and is being ducted outdoors.

6) **HEAT WHEEL** – This generally describes all rotating devices which transfer only sensible energy.

7) **MEDIA** – The corrugated material inside the wheel.

8) **OUTDOOR AIR** – The fresh outside air that is being drawn in the energy recovery wheel. Once it passes through the wheel it becomes the supply air.

9) **RETURN AIR** – Air from the indoor space that is pulled through the energy recovery wheel. Once it passes through the wheel it is referred to as exhaust air.

10) **ROTOR** – The media-filled wheel that rotates. It transfers heat energy and water vapor from one ducted airstream to the other. Often, the rotor will be referred to as a wheel.

11) **SEAL** – The soft material that closely surrounds the rotor to limit the amount of bypass air around the rotor.

12) **SUPPLY AIR** – Air provided to the indoor space. Outside air that passes through the energy recovery wheel becomes supply air.

13) **UNIT** – Used frequently throughout this manual to mean the Fusion 3Å total energy recovery wheel and attendant components such as cabinets, motors, fans and other parts that work together to make an effective energy recovery product.

14) **WHEEL** – Refers to the rotating wheel containing the coated media. The stationary framework supporting the wheel is the wheel cassette.

15) **MAIN ELECTRICAL PANEL** – Distribution panel which divides an electrical power supply into subsidiary circuits, while providing a protective fuse or circuit breaker for each circuit in a common enclosure.

16) **GEAR MOTOR** – Integrated electric motor and reduction gear train used to provide rotational movement to the wheel.

17) **ELECTRICAL POWER PENETRATION LOCATION** – Path through which the electrical power supply is to connect with the main electrical panel. In cases where a preheat is present, the power supply is to attached to the electrical panel of the preheat, which them feeds the main electrical panel.

18) **OUTSIDE AIR DAMPER** – A set of blades used to regulate the outside air flow into the unit.

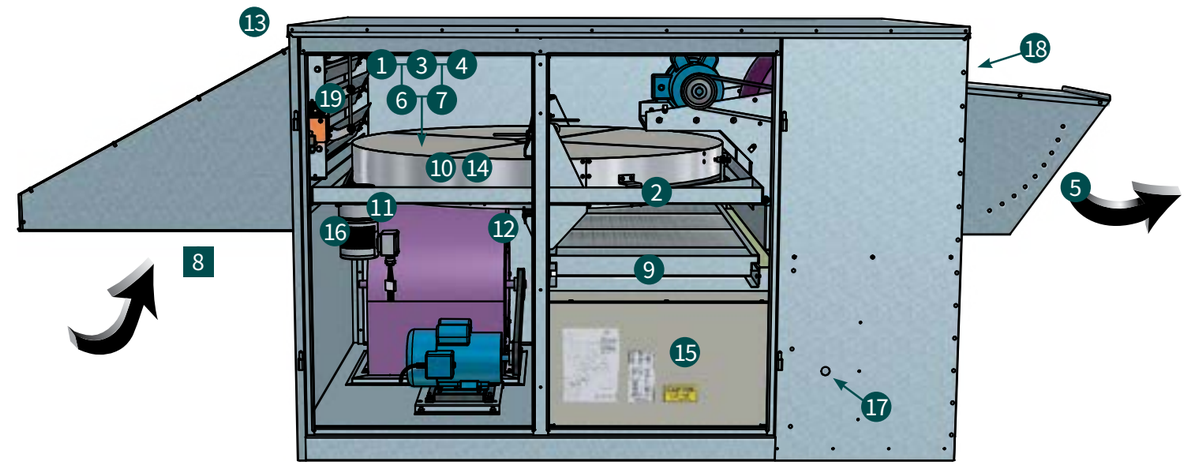

FIGURE 2. Standard FV unit with components highlighted per definitions on **PAGE 2**.

MODEL DESCRIPTION

On the front of the FV unit is an identification label (See **FIGURE 3**). The specifications on the label correspond to the actual unit. The model number (1000, 2000, etc.) refers to the nominal air volume (in cfm) that the FV pre-conditioner is capable of supplying.

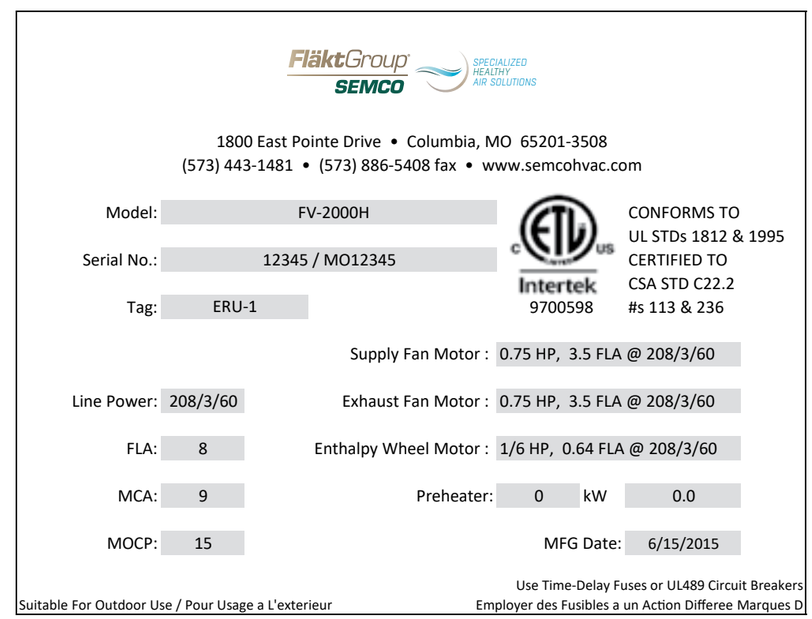

FIGURE 3. Standard FV nameplate with electrical data.

RECEIVING & INSPECTION

Upon delivery, confirm that the quantity and model(s) received matches the Bill of Lading. If there is any discrepancy, immediately notify FläktGroup SEMCO LLC.

Inspect the skidded FV(s) for signs of damage. If damage is suspected, sign the Bill of Lading "damaged". If no visible damage is apparent, the unit should be properly lifted and stored until installation.

While skidded, the FV can be lifted by a forklift using the skid. Once removed from the skid, lifting must only be performed with spreader bars, cable and hooks as shown in **FIGURE 4**. Do not attempt to lift the FV by grasping the hoods.

NOTE: In the table of weights on the right, the package weighs approximately 100 lbs. more than the net weight.

MODEL	NET WEIGHT (LBS)
FV-1000	500
FV-2000	550
FV-3000	1,000
FV-4000	1,250
FV-5000	1,350
FV-7500	1,950
FV-9000	2,000

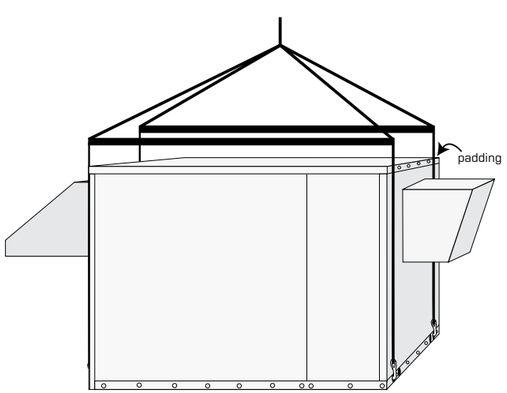

FIGURE 4. Correct lifting technique using spreader bars.

STORAGE

If the FV is to be stored for any time before installation, it must be protected from the weather. Indoor storage is recommended. The unit has openings provided for ducting. These openings make the internal equipment (motors, belts, fans and insulation) vulnerable to inclement weather conditions (prior to installation) and can cause standing water to accumulate inside the enclosure. This is to be absolutely avoided.

OVERALL DIMENSIONS

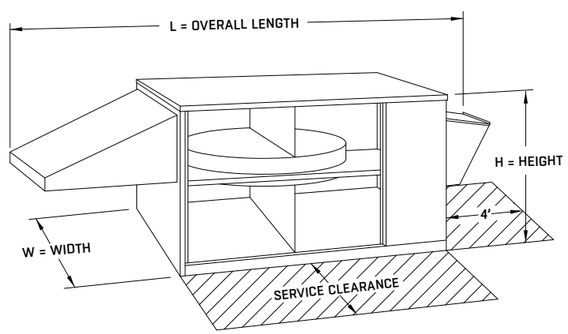

UNIT	L	H	W
(DIMENSIONS IN INCHES)			
FV-1000	77.8	31.0	29.0
FV-2000	88.4	32.4	37.0
FV-3000	102.5	47.7	45.0
FV-4000	130.8	51.5	54.0
FV-5000	133.5	51.5	54.0
FV-7500	150.0	58.6	64.6
FV-9000	150.0	58.6	64.6

Service clearance is equal to the width of the unit.

LIFTING TECHNIQUE

When rigging the FV unit, spreader bars must be used. Padding must be inserted between the straps and the unit to avoid scratching the paint. It is suggested to locate the unit prior to installing the hoods or indoor duct intake. Lifting holes are provided at four points located on the base perimeter of the FV unit. The weights shown on **PAGE 4** may be used as maximum weights for rigging.

INSTALLATION

Installation of the FV is a relatively simple procedure, but should be undertaken in a methodical fashion, following the directions outlined in this manual.

NOTE: Prior to starting unit, open access door and;

Remove loose parts shipped inside;

Remove wheel shipping restraint (FV-3000 thru FV-9000 only).

The installation location should be chosen to provide easy, convenient access. As with all mechanical equipment, routine maintenance and inspection is necessary. Choose a site from which connecting duct is visible. Avoid locations that are near or downwind of smoke, fumes or exhaust outlets of other equipment. The front access panel should have clearance space equal to the depth of the unit to allow for service.

Several ducting arrangements are possible. Make sure your duct plans match the FV duct opening arrangement. (See **UNIT CONFIGURATION**, **PAGE 8**).

The FV can be ordered for indoor or outdoor installation. An outdoor unit is identified by the existence of two hoods that are shipped on top of the FV unit. It will be necessary to attach the outdoor air intake hood (larger one with filter rack) and the exhaust air outlet hood (smaller one with damper) on their designated openings (see **FIGURE 6A-D**). The indoor unit is identified by a rectangular duct shipped on top of the unit. This indoor intake duct must be installed over the outdoor air intake opening (see **FIGURE 6A-D**).

If the unit is a rooftop unit, it may be installed on a curb. If FläktGroup SEMCO supplies the curb, then it will have been shipped separately. The curb must be installed before a rooftop FV can be placed. Proper care should be taken to ensure correct placement of the curb before holes are cut for ducting through the roof itself. Effective waterproofing of the rooftop interface is necessary. That means sealing around the roof curb to prevent any leakage into the building or the air ducts. The curb and FV must be level and installed and operated in a horizontal position.

If the unit is not installed on the roof, then a level concrete or paved pad to support the FV must be provided. The pad must be of sufficient height and located to assure proper water drainage in any weather.

When the unit has been placed in its permanent location, duct work should be brought up to and attached to the unit. Duct work may be flanged and screwed to the unit face for horizontal connections. Duct work for a vertical unit should be flanged and gasketed level with the curb to allow the unit weight to form the seal. Penetrations through the unit floor must be avoided to prevent any water penetrating into the cabinet.

The standard electrical power penetration location is marked on the front of the unit, to the right of the main service access door. The power connection terminals can be accessed by opening the service door and removing the electrical panel cover. The wiring connection should be made in accordance with all local codes and regulations.

If the unit has been ordered with electric preheat, it is shipped installed. The main power connection to the unit is then made at the electric preheat panel instead of the unit electrical panel. For the indoor version of the FV, the electric heater should be externally insulated after installation.

On the front right side of the FV is the unit identification tag. It states the electrical requirements for the unit. (If electric preheat option has been ordered, the unit ID tag is located on the heater.) Make sure the power provided to the installation site matches that required by the unit. Note and verify that voltage/phase/capacity needed and provided are the same, and the line voltage must not vary more than +/-5%.

Inspect the interior of the unit for any damage. On the floor inside the unit is the outdoor air metal filter and optional filter media. This filter is to be installed at the outdoor air intake opening after the hood (outdoor FV only) has been attached.

The FläktGroup SEMCO energy recovery wheel is mounted horizontally inside the FV. The motor and belt arrangement that turn the wheel are visible next to the wheel at the access panel opening. The motor wires running to the electrical panel are attached by a quick release disconnect. The quick disconnect must be separated before sliding out the wheel cassette. The wheel cassette need not be moved for installation or hookup, but it can be pulled out for easy maintenance and inspection purposes. On the FV-3000, FV-4000, FV-5000, FV-7500, and FV-9000 remove wheel shipping restraint.

CURB MOUNTING

The FV series is generally installed on a curb (unless mounted indoors). The curb ships separately for pre-installation to simplify rigging. The dimensions of the curbs required for the FV units are listed below.

All FV configurations have the same curb dimensions. The curb for an FV unit can be provided by FläktGroup SEMCO or purchased from a curb manufacturer provided it is designed to support the weight of the FV unit specified in this manual and conforms to the dimensions listed in the table below.

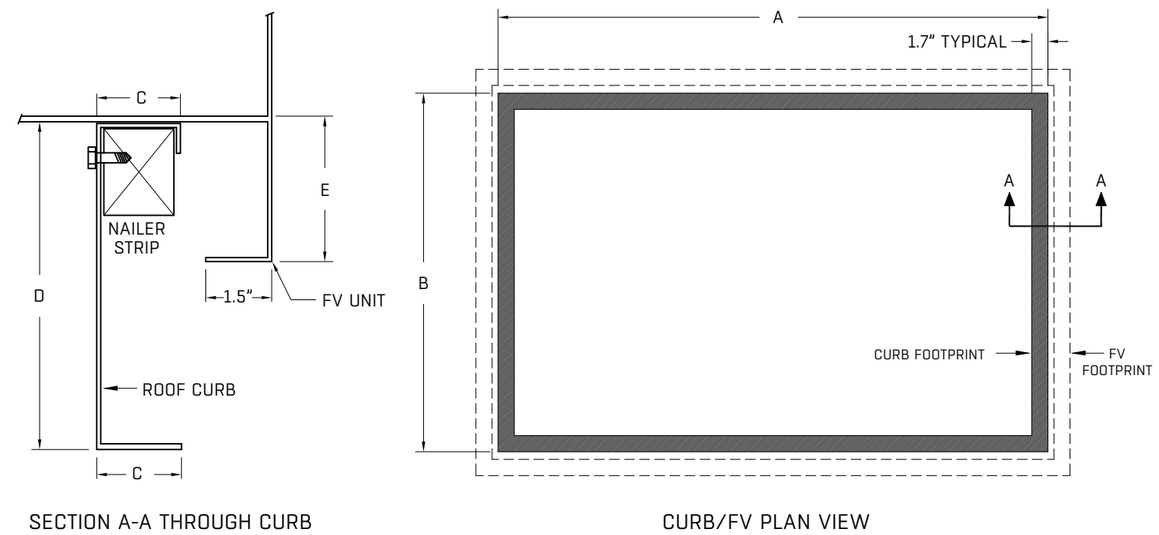

FIGURE 5. Curb dimensions.

MODEL	A	B	C	D	E
FV-1000	40.1	25.0	1.7	14.0	3.0
FV-2000	47.4	33.0	1.7	14.0	2.0
FV-3000	60.6	41.0	1.7	14.0	3.0
FV-4000	74.6	49.9	1.7	14.0	3.0
FV-5000	74.6	49.9	1.7	14.0	3.0
FV-7500	91.0	60.4	1.7	14.0	3.0
FV-9000	91.0	60.4	1.7	14.0	3.0

All dimensions in inches.

UNIT CONFIGURATION

The FV pre-conditioner can be installed in one of four possible configurations depending on the arrangement of the supply and return air openings.

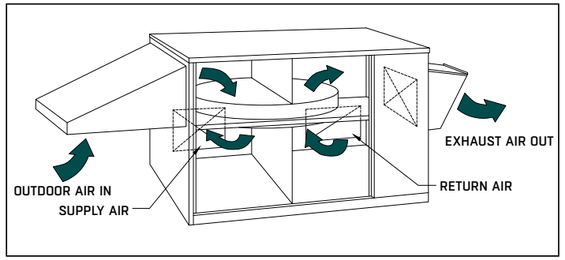

FIGURE 6. H Series configuration with horizontal supply air and horizontal return air duct arrangement.

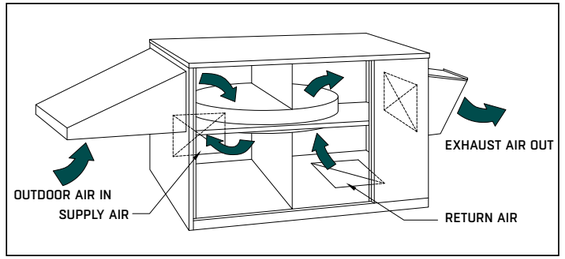

FIGURE 7. HS Series configuration with horizontal supply air and vertical return air duct arrangement.

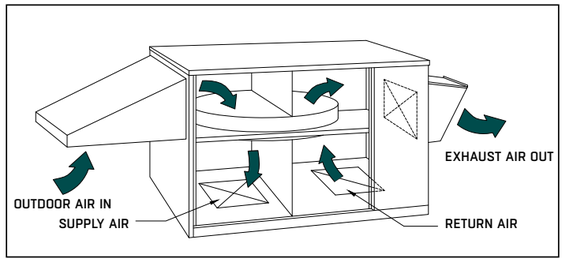

FIGURE 8. V Series configuration with vertical supply air and vertical return air duct arrangement.

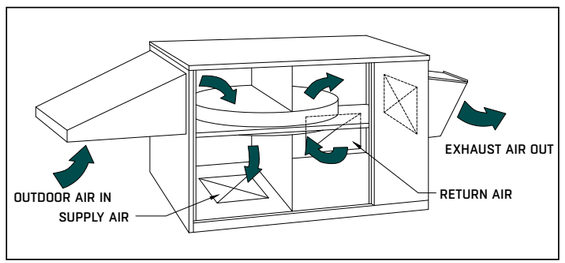

FIGURE 9. VS Series configuration with vertical supply air and horizontal return air duct arrangement.

CONTROLS

BASIC PACKAGE

The basic FV unit ships with no controls. The standard wiring package provides connections for the starting/stopping of the complete unit, supply fan and the energy wheel. The connections are shipped with factory jumpers installed. Remote control of any of these options can be achieved by removing the correct factory jumper and installing a contact in its place. The contact should be capable of handling 24V power at 2 amps. (See appropriate 1Ø or 3Ø circuit diagram on **PAGES 12-16**). It is strongly recommended that a remote unit start/stop relay (supplied by others) be used to turn the unit on and off. This allows any optional motorized air damper to fully close when the unit is off.

OPTIONAL ELECTRIC PREHEAT FROST CONTROL

For applications where the outdoor conditions do not exceed -10°F and where the indoor design conditions do not exceed 70°F and 25 percent RH, the energy wheel can operate at full capacity and will not frost. For colder design conditions or buildings with higher humidity levels, frosting of the wheel can be prevented by providing a modest amount of preheat to the outdoor air. The amount of preheat required is small and is not intended to raise the outdoor air temperature above the freezing point. It is only necessary to keep the exhaust air temperature above the dew point. This prevents condensation on the wheel so that all the moisture transfer occurs in the vapor phase.

The preheat control option includes a finned tube electric coil mounted on the outdoor air intake of the unit, an SCR controller and a temperature sensor mounted in the outdoor air plenum. The temperature for the controller is set to the minimum temperature of the outdoor air required to prevent condensation at the design indoor temperature and humidity. This is done by plotting a line on the psychometric chart from the indoor design condition down to the coldest temperature that does not cause the operating line to intersect the saturation curve on the chart. As stated above, for inside conditions of 70°F and 25 percent RH, this temperature is about -10°F.

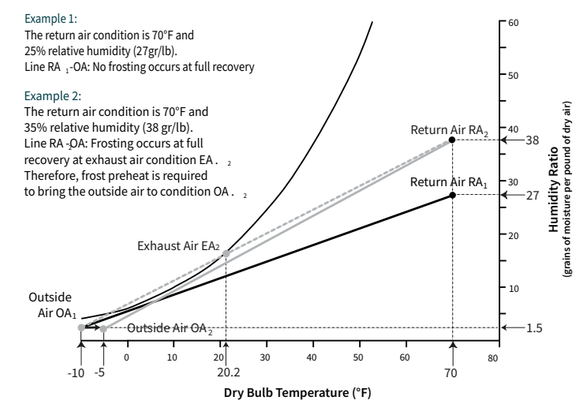

FIGURE 10. Using the psychometric chart to determine the need for preheat frost control.

NON-VARIABLE SPEED WHEEL CONTROLS

BASIC PACKAGE

The basic FläktGroup SEMCO FV unit ships without controls. The standard wiring package provides connections for the starting/stopping of the complete unit, supply fan and the energy wheel. The connections are shipped with factory jumpers installed. Remote control of any of these options can be achieved by removing the correct factory jumper and installing a contact in its place. The contact should be capable of handling 24VAC power at 3.5 amps, except for the FläktGroup SEMCO FV-1000 which handles 24VAC at 2 amps. (See appropriate 1Ø or 3Ø circuit diagram on **PAGES 12-18**). It is strongly recommended that a remote unit start/stop relay (supplied by others) be used to turn the unit on and off. This allows the outdoor air damper to fully close when the unit is off.

OPTIONAL ELECTRIC PREHEAT FROST CONTROL

For applications where the outdoor conditions do not exceed -10°F and where the indoor design conditions do not exceed 70°F and 25 percent RH, the energy wheel can operate at full capacity and will not frost. For colder design conditions or buildings with higher humidity levels, frosting of the wheel can be prevented by providing a modest amount of preheat to the outdoor air. The amount of preheat required is small and is not intended to raise the outdoor air temperature above the freezing point. It is only necessary to keep the exhaust air temperature above the dew point. This prevents condensation on the wheel so that all the moisture transfer occurs in the vapor phase.

The preheat control option includes a finned tube electric coil mounted on the outdoor air intake of the unit, an SCR controller and a temperature sensor mounted in the outdoor air plenum. The temperature for the controller is set to the minimum temperature of the outdoor air required to prevent condensation at the design indoor temperature and humidity. This is done by plotting a line on the psychometric chart from the indoor design condition down to the coldest temperature that does not cause the operating line to intersect the saturation curve on the chart. As stated above, for inside conditions of 70°F and 25 percent RH, this temperature is about -10°F (See **FIGURE 10** on **PAGE 9**).

OPTIONAL VARIABLE SPEED WHEEL CONTROL PACKAGE

- **Digital reading of temperatures**
- **Proportional heating control**
- **Automatic summer/winter changeover**

OPTIONAL STOP/JOG ECONOMIZER AND WHEEL FROST PROTECTION (GENERAL PURPOSE ROTATION DETECTOR)

The stop/jog economizer option is used during moderate outdoor air temperatures to stop the recovery wheel. The jog function is included to allow the wheel to rotate periodically to self-clean.

The stop/jog economizer consists of a temperature sensor and a circuit board with dip switch selection of temperature and stop/jog times. When the outdoor temperature is in the range between the two set-points, the timer relay operates the wheel for approximately 30 seconds in every 30 minutes.

The general purpose rotation detector (GPRD) board also has the ability to put the wheel in stop/jog mode when the outdoor air temperature drops below a preset value. This is a lower cost option than the electric preheat. It also has the disadvantage in supplying untreated outdoor air into the ventilation system whenever the stop/jog activates.

GPRD controller as installed on the electric panel.

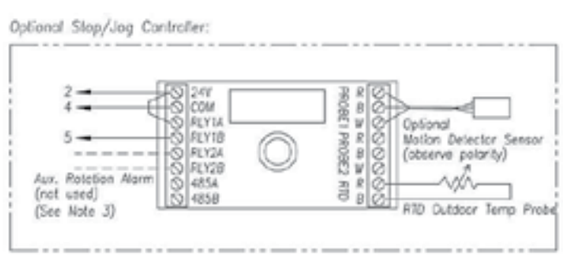

OPTIONAL ROTATION DETECTOR SENSOR FOR A GPRD CONTROLLER

The GPRD stop/jog economizer board is supplied with a motion detector to monitor the rotation of the energy recovery wheel (see **FIGURE 11**). The sensor is a Hall effect device that senses the passage of a small magnet on the perimeter of the rotor. When the sensor fails to register any wheel rotation - it requires a signal every 10 minutes - it energizes the alarm relay of the GPRD board. This can be used for remote indication of the alarm. The sensor will not create a false alarm when the GPRD controller is in stop/jog mode.

The alarm resets itself once the wheel begins to turn or the system is shut off and restarted.

THERMOSTAT FROST PROTECTION

A lower cost solution to frost protection is to use a thermostat to turn the entire ventilation unit off during periods when the air is below the calculated frosting temperature. This should only be used in non-critical ventilation applications as no outdoor air will be supplied when the unit is switched off by the thermostat.

Default Stop/Jog Device Parameters

Press and "double click" dial to enter parameter menu.
Rotate dial to view parameters. Press & click dial to select parameter for editing. Value will flash when parameter is selected.
Adjust setting by rotating dial, then press & click dial to lock in new setting. After 10secs with no activity, parameter menu will exit.
Alarms can be cleared by pressing and holding the dial for 3 seconds.

Parameter	Default Setting
mOdE	3
mOtI On ALArm	10
rEVErSE ALArm	OFF
S-J EnAbLE	On
S-J LOW tEmP	55
S-J HI tEmP	75
S-J On tIME	30
S-J OFF tIME	30
S-J FrOSt EnAbLE	OFF
S-J FrOSt tEmP	0
tEmP UnIts	F
rELAY 1	4
rELAY 2	1
dISPLAY	2

FIGURE 11 GPRD Controller settings.

1Ø CIRCUIT DIAGRAM, FV-1000 THROUGH FV-5000

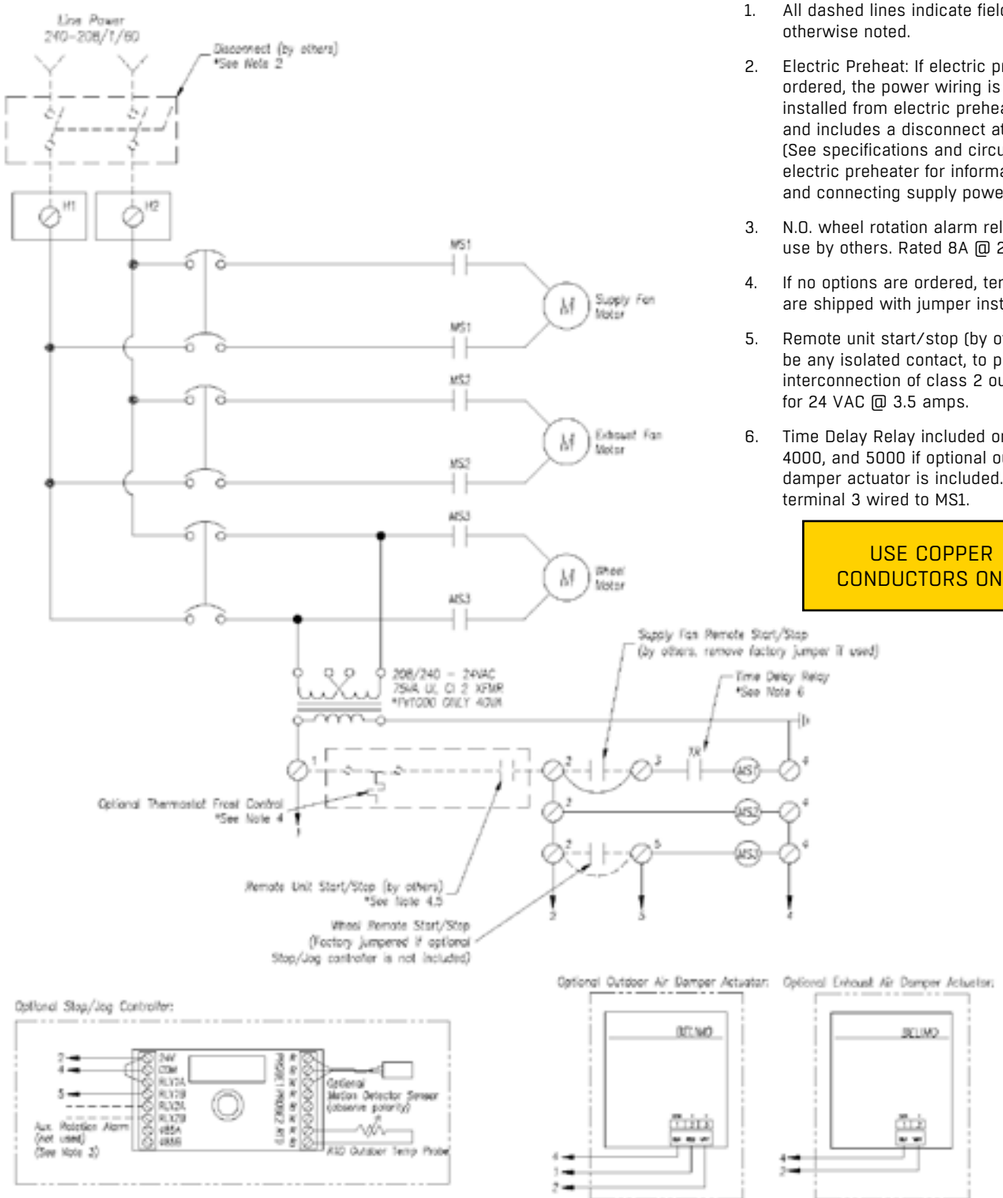

NOTES:

1. All dashed lines indicate field wiring unless otherwise noted.
2. Electric Preheat: If electric preheater is ordered, the power wiring is factory installed from electric preheater to FV Panel and includes a disconnect at the preheater. (See specifications and circuit diagram on electric preheater for information on sizing and connecting supply power.)
3. N.O. wheel rotation alarm relay contact, for use by others. Rated 8A @ 250VAC/30VDC.
4. If no options are ordered, terminals 1 & 2 are shipped with jumper installed.
5. Remote unit start/stop (by others) may be any isolated contact, to prevent interconnection of class 2 outputs, suitable for 24 VAC @ 3.5 amps.
6. Time Delay Relay included on FV-3000, 4000, and 5000 if optional outdoor air damper actuator is included. Otherwise terminal 3 wired to MS1.

USE COPPER CONDUCTORS ONLY

To avoid possible contactor failure, place start/stop relays inside the electrical enclosure.

3Ø CIRCUIT DIAGRAM, FV-1000

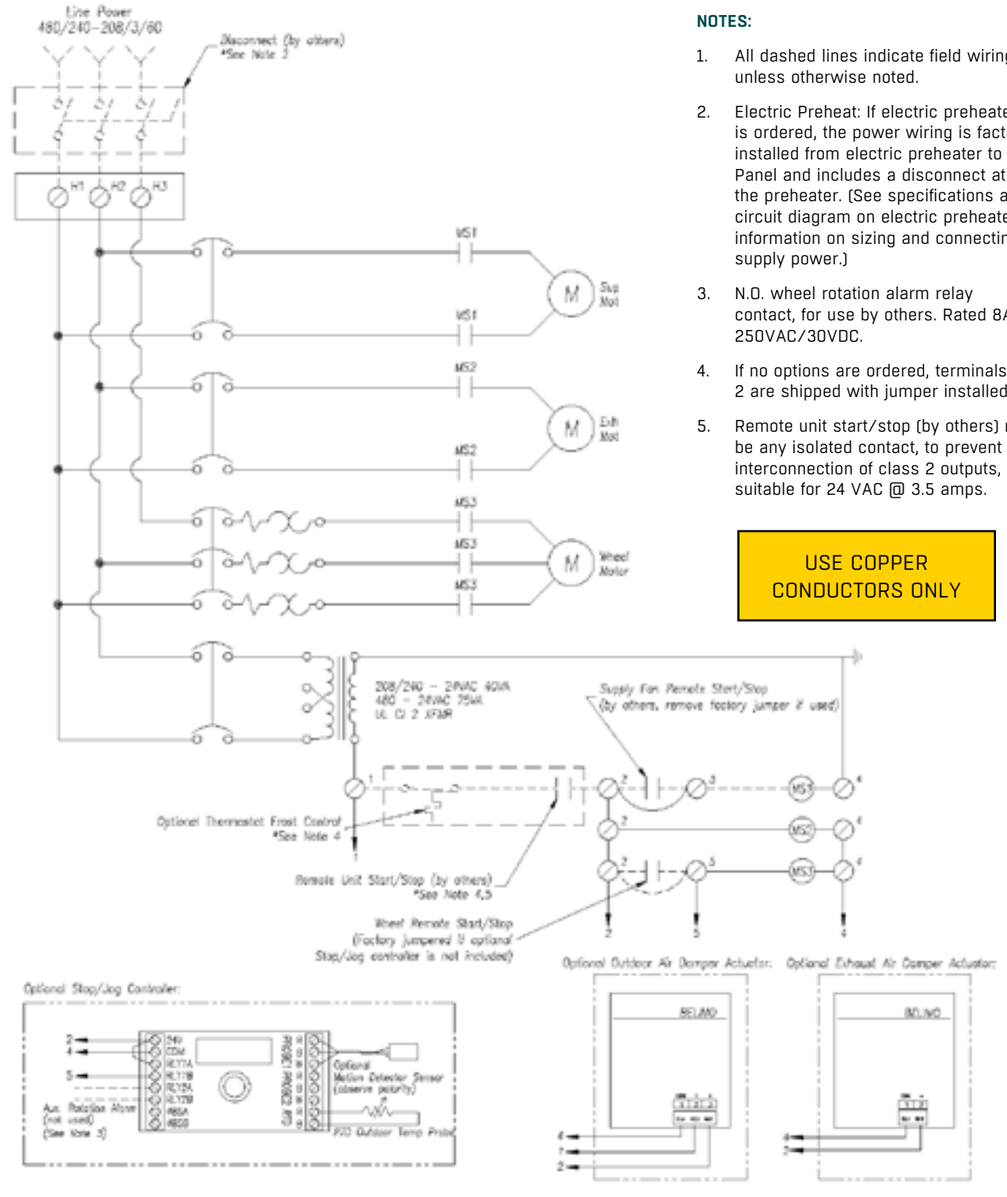

NOTES:

1. All dashed lines indicate field wiring unless otherwise noted.
2. Electric Preheat: If electric preheater is ordered, the power wiring is factory installed from electric preheater to FV Panel and includes a disconnect at the preheater. (See specifications and circuit diagram on electric preheater for information on sizing and connecting supply power.)
3. N.O. wheel rotation alarm relay contact, for use by others. Rated 8A @ 250VAC/30VDC.
4. If no options are ordered, terminals 1 & 2 are shipped with jumper installed.
5. Remote unit start/stop (by others) may be any isolated contact, to prevent interconnection of class 2 outputs, suitable for 24 VAC @ 3.5 amps.

USE COPPER CONDUCTORS ONLY

To avoid possible contactor failure, place start/stop relays inside the electrical enclosure.

3Ø CIRCUIT DIAGRAM, FV-2000 THROUGH FV-9000

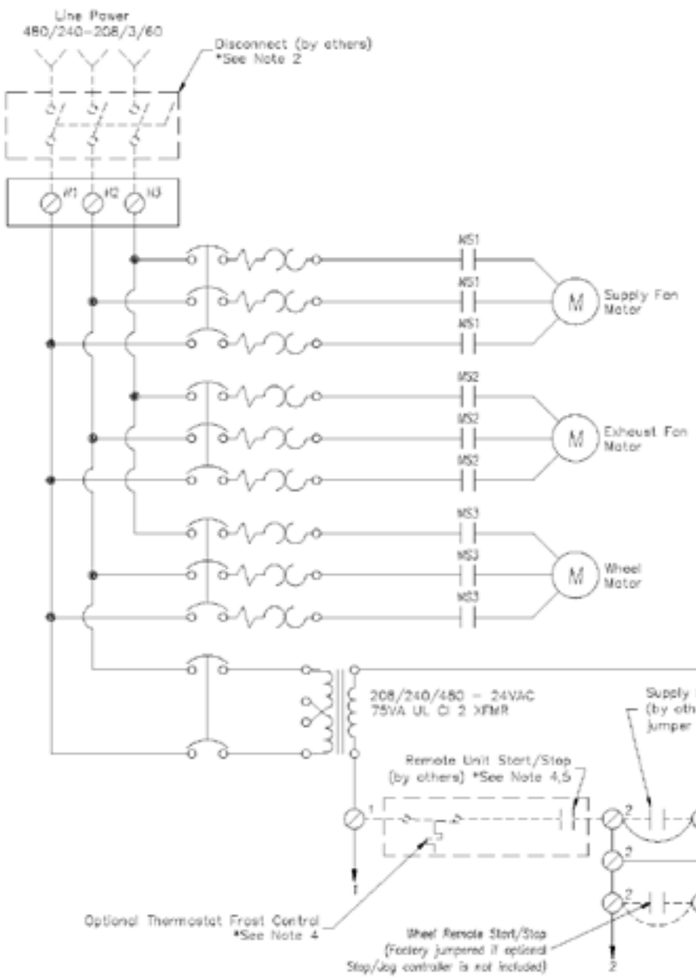

NOTES:

1. All dashed lines indicate field wiring unless otherwise noted.
2. Electric Preheat: If electric preheater is ordered, the power wiring is factory installed from electric preheater to FV Panel and includes a disconnect at the preheater. (See specifications and circuit diagram on electric preheater for information on sizing and connecting supply power.)
3. N.O. wheel rotation alarm relay contact, for use by others. Rated 8A @ 250VAC/30VDC.
4. If no options are ordered, terminals 1 & 2 are shipped with jumper installed.
5. Remote unit start/stop (by others) may be any isolated contact, to prevent interconnection of class 2 outputs, suitable for 24 VAC @ 3.5 amps.
6. Time Delay Relay included on FV-3000, 4000, 5000, 7000 and 9000 if optional outdoor air damper actuator is included. Otherwise terminal 3 wired to MS1.

USE COPPER CONDUCTORS ONLY

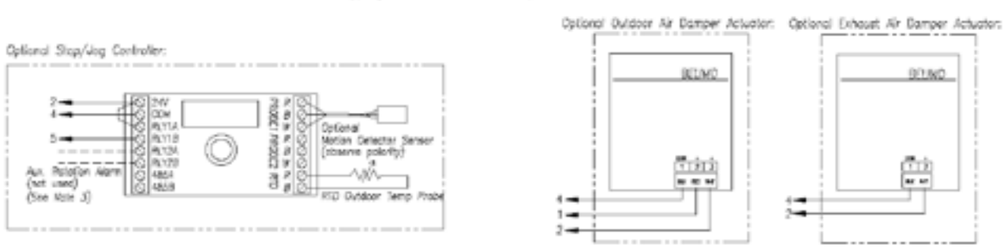

To avoid possible contactor failure, place start/stop relays inside the electrical enclosure.

3Ø CIRCUIT DIAGRAM, FV-2000 THROUGH FV-9000 FAN WITH VFDs

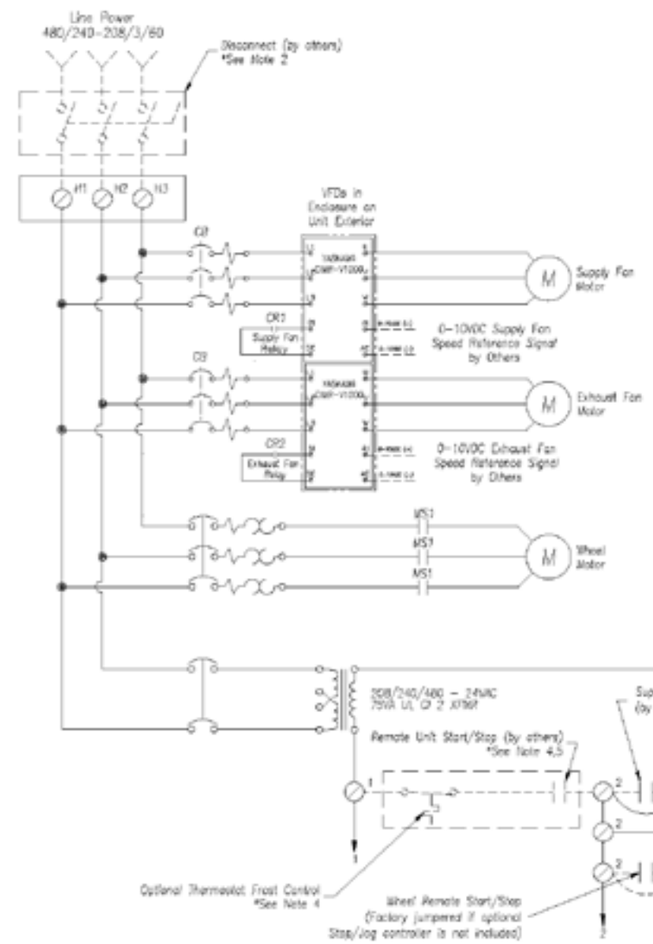

NOTES:

1. All dashed lines indicate field wiring unless otherwise noted.
2. Electric Preheat: If electric preheater is ordered, the power wiring is factory installed from electric preheater to FV Panel and includes a disconnect at the preheater. (See specifications and circuit diagram on electric preheater for information on sizing and connecting supply power.)
3. N.O. wheel rotation alarm relay contact, for use by others. Rated 8A @ 250VAC/30VDC.
4. If no options are ordered, terminals 1 & 2 are shipped with jumper installed.
5. Remote unit start/stop (by others) may be any isolated contact, to prevent interconnection of class 2 outputs, suitable for 24 VAC @ 3.5 amps.
6. Time Delay Relay included on FV-3000, 4000, 5000, 7500, and 9000 if optional outdoor air damper actuator is included. Otherwise terminal 3 wired to CR1.

USE COPPER CONDUCTORS ONLY

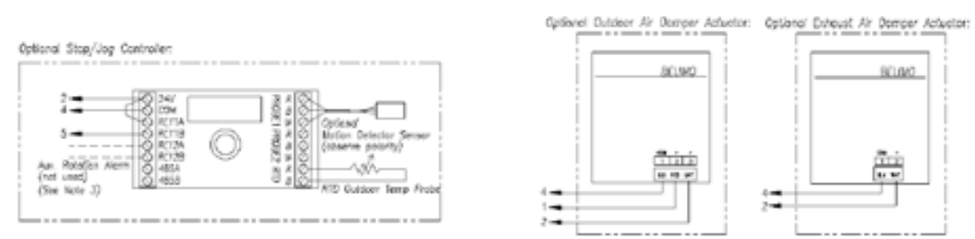

To avoid possible contactor failure, place start/stop relays inside the electrical enclosure.

3Ø 208V CIRCUIT DIAGRAM, FV WITH VARIABLE SPEED WHEEL CONTROL, NO FAN VFDs

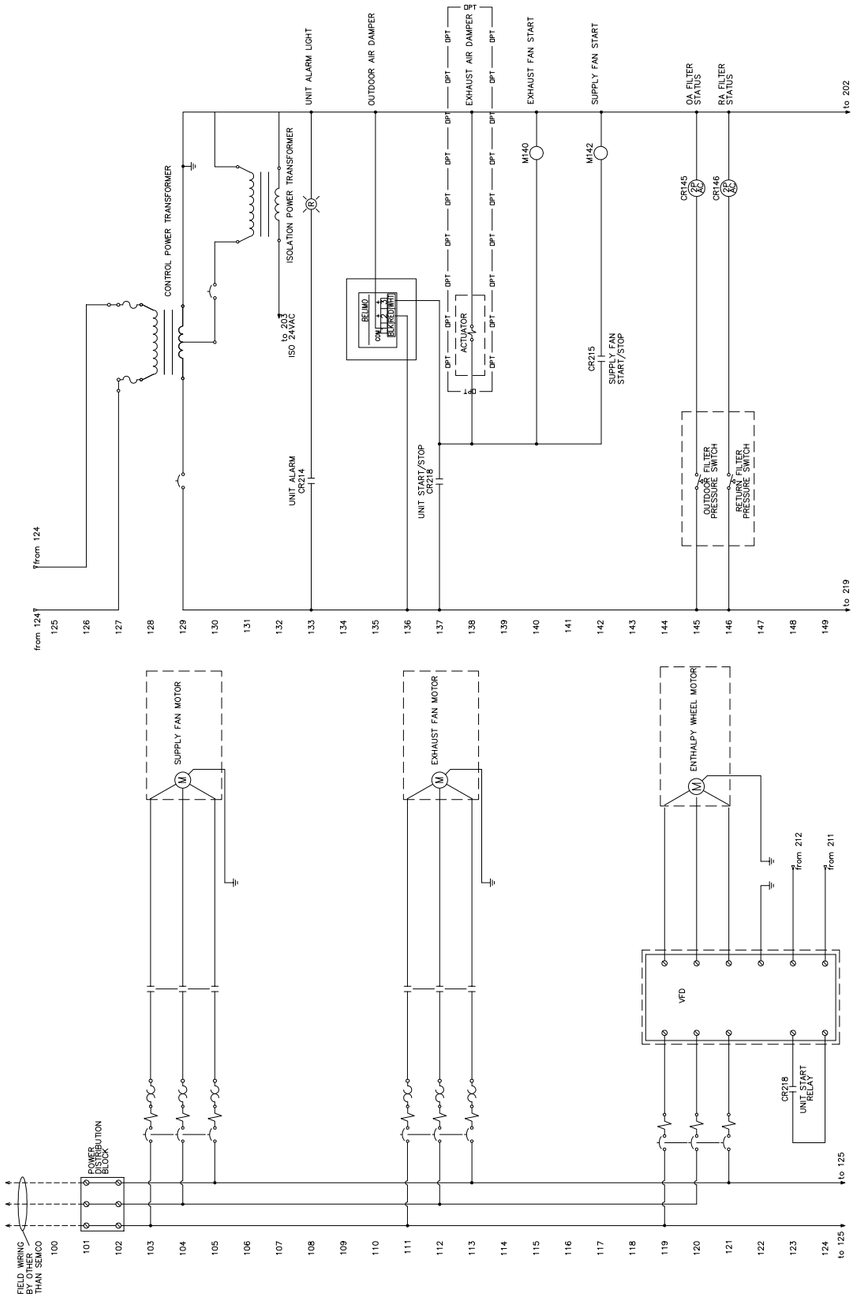

3Ø 480/575V CIRCUIT DIAGRAM, FV WITH VARIABLE SPEED WHEEL CONTROL, NO FAN VFDs

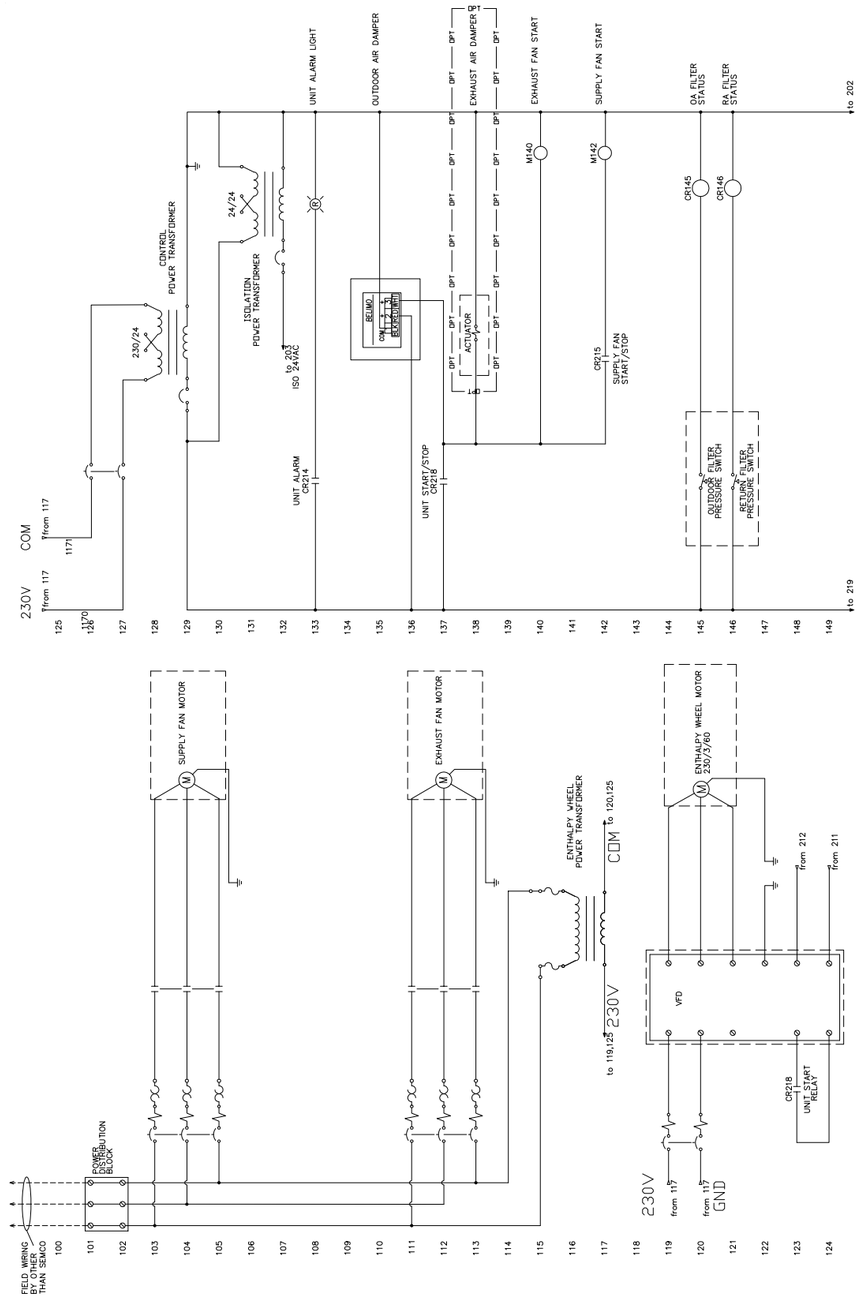

3Ø 208V CIRCUIT DIAGRAM, FV WITH VARIABLE SPEED WHEEL CONTROL, WITH FAN VFDs

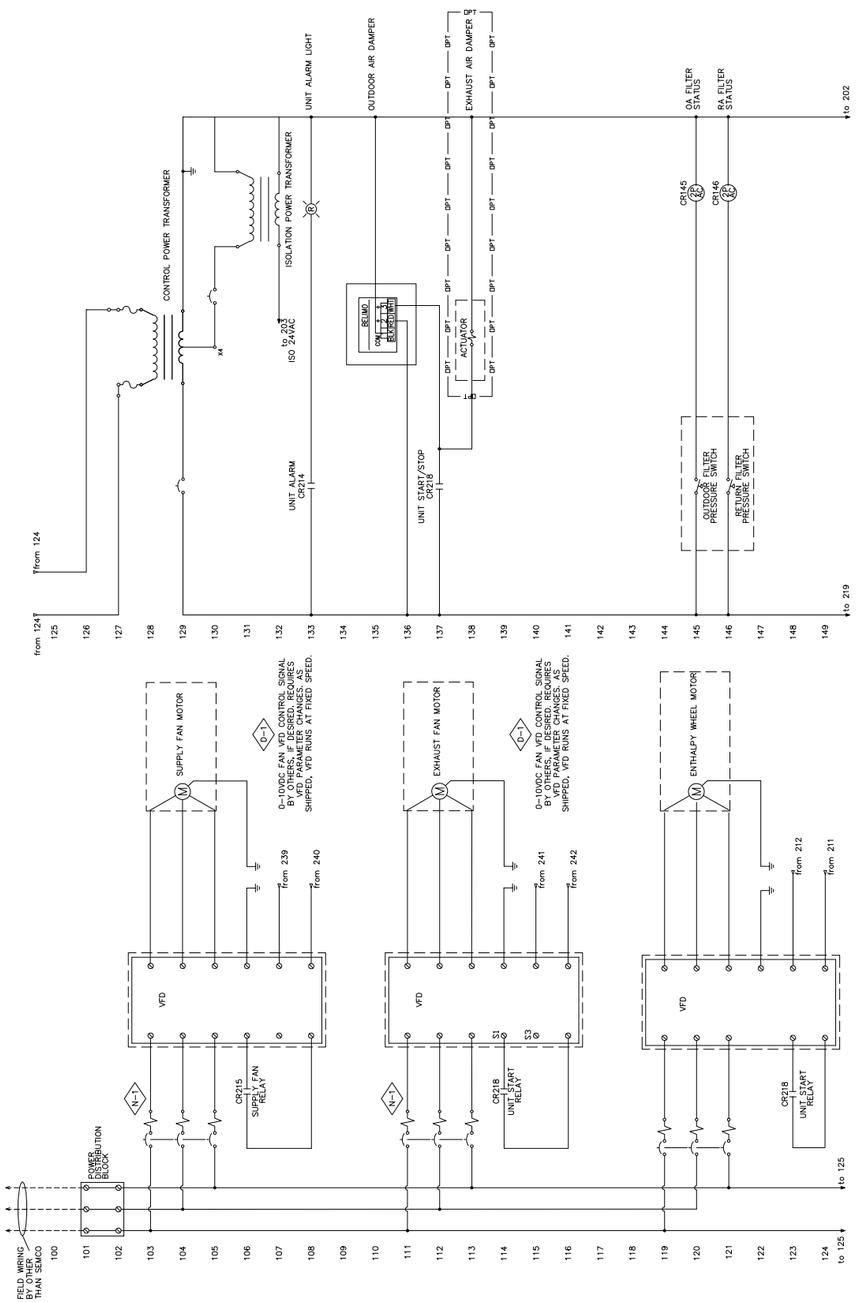

3Ø 480V CIRCUIT DIAGRAM, FV WITH VARIABLE SPEED WHEEL CONTROL, WITH FAN VFDs

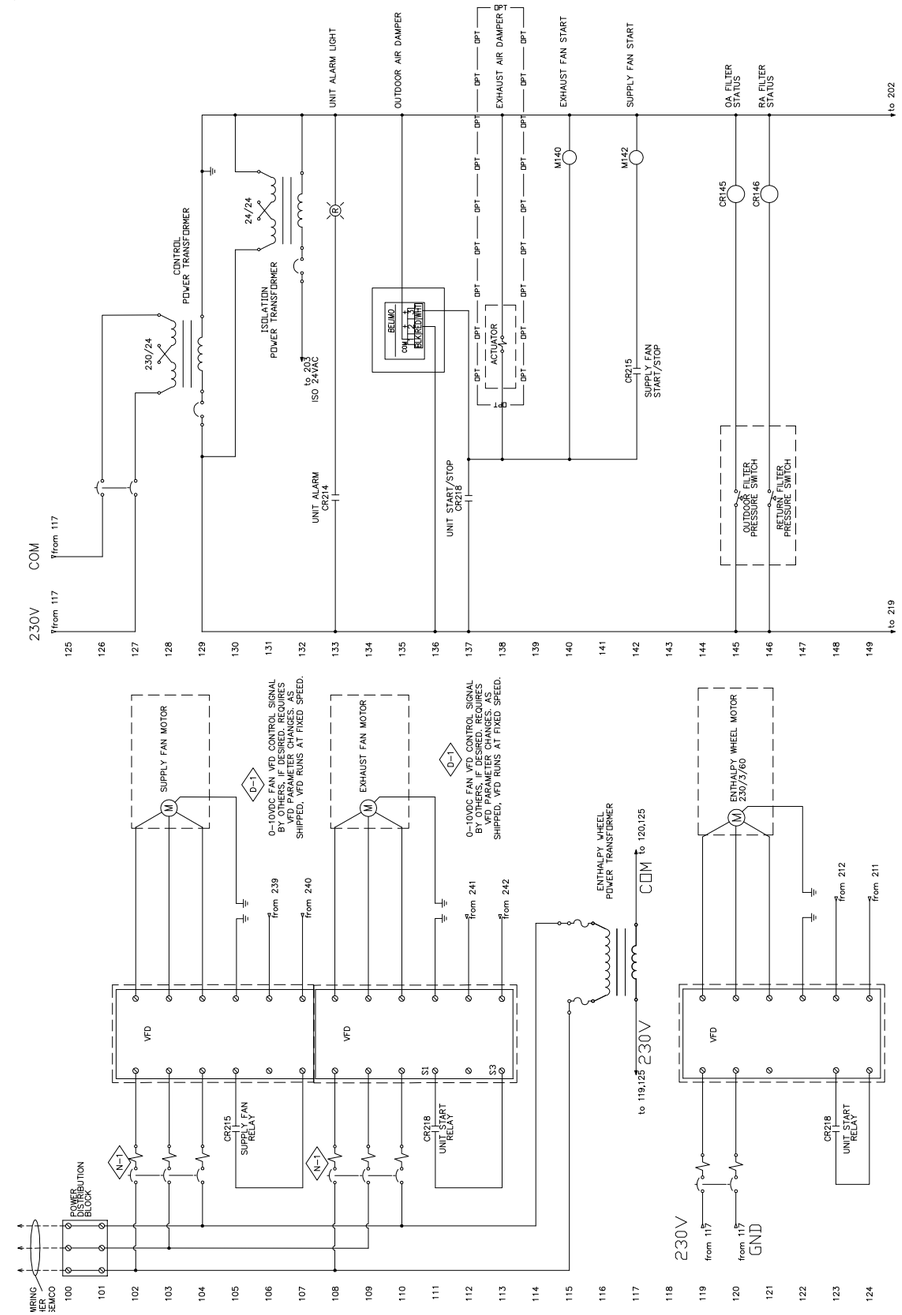

FV WITH VARIABLE SPEED WHEEL CONTROL

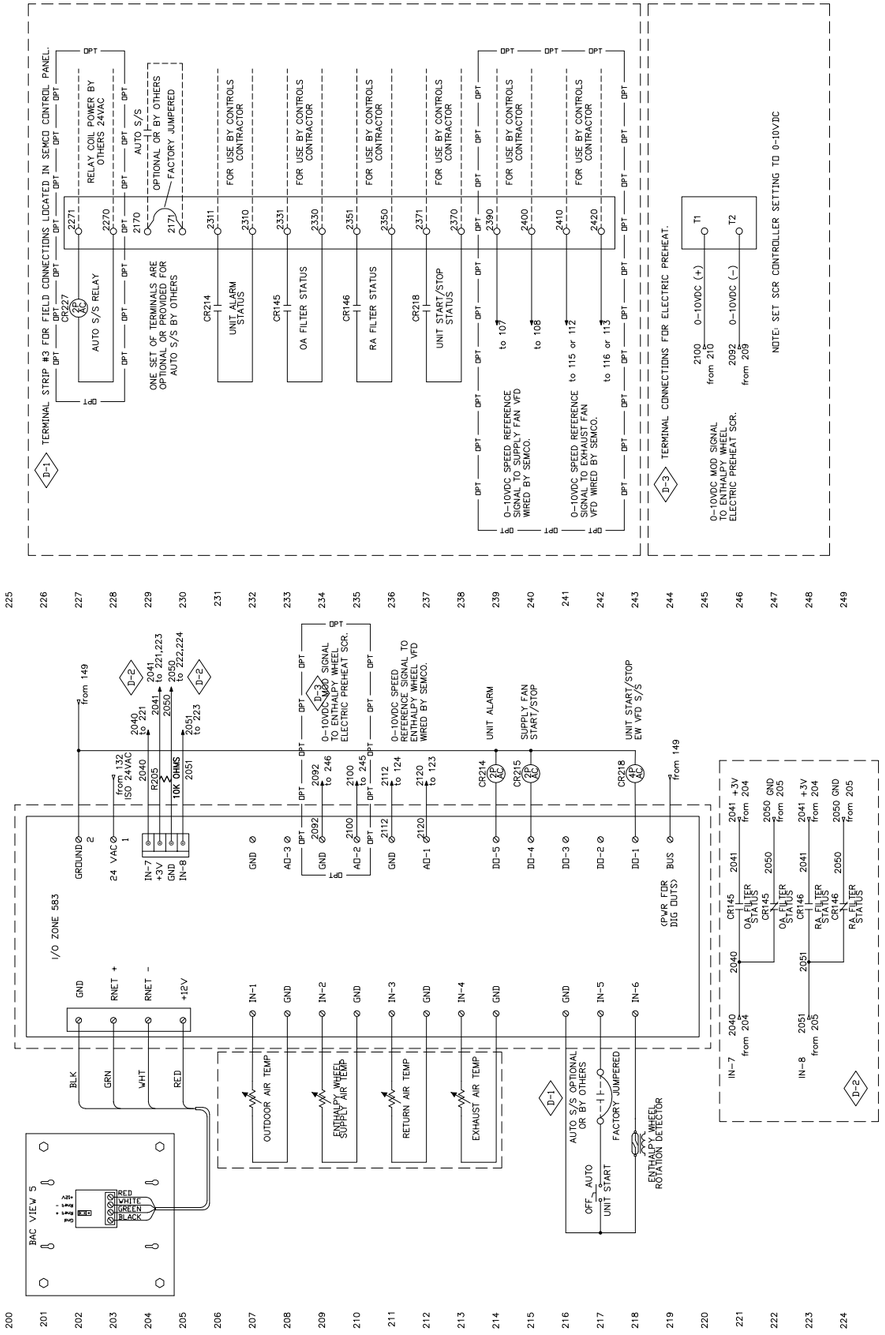

3Ø ELECTRIC PREHEAT FROST CONTROL CIRCUIT DIAGRAM

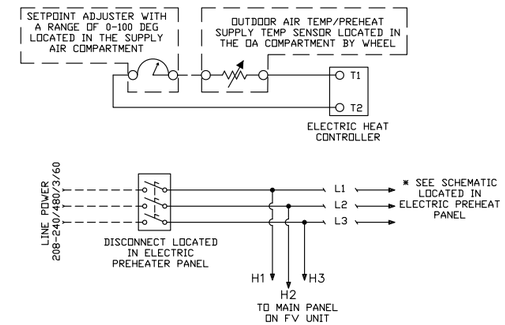

Note:

On units equipped with the variable speed wheel control package, electric heat is controlled by analog signal from the unit controller. Refer to electrical schematic for details.

USE COPPER CONDUCTORS ONLY

1Ø ELECTRIC PREHEAT FROST CONTROL CIRCUIT DIAGRAM

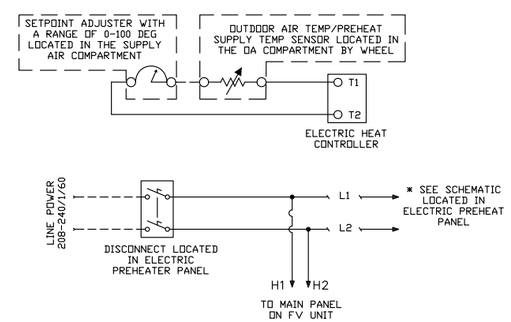

USE COPPER CONDUCTORS ONLY

ELECTRIC PREHEAT LAYOUT

UNIT SIZE	W	H	L	A	B	C
FV-1000	24.4	9.0	14.0	20.0	1.0	1.0
FV-2000	31.1	11.0	14.0	20.0	1.0	2.0
FV-3000	39.1	16.0	20.0	40.0	1.0	2.0
FV-4000	49.1	17.0	20.0	40.0	1.0	2.0
FV-5000	49.1	17.0	20.0	40.0	1.0	2.0
FV-7500	56.0	24.0	20.0	40.0	3.0	2.0
FV-9000	56.0	24.0	20.0	40.0	3.0	2.0

All dimensions in inches.

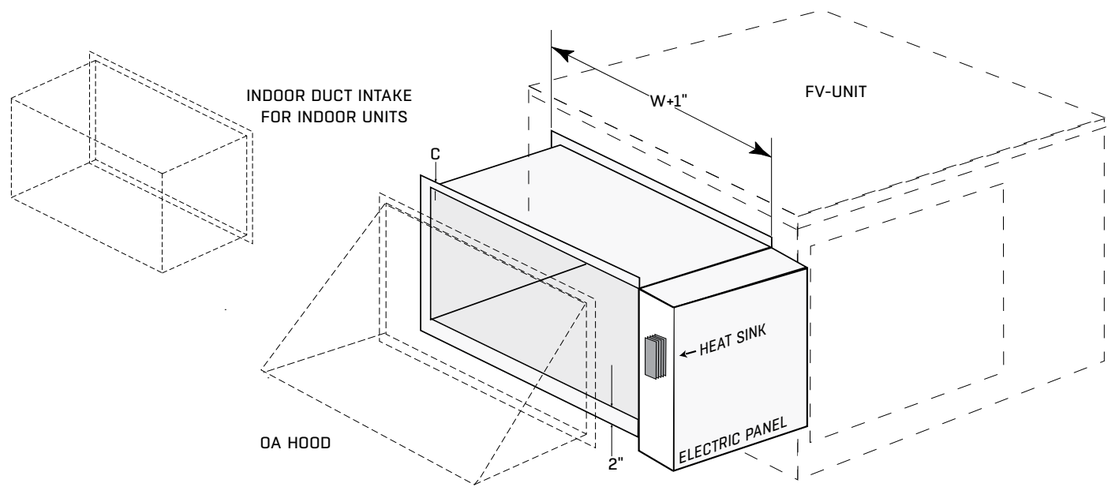

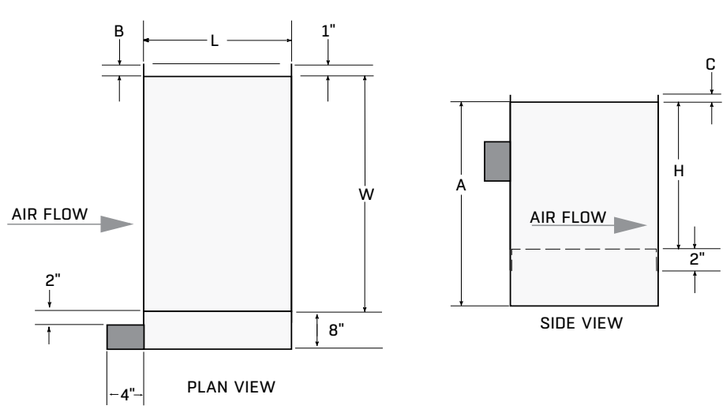

OPTIONAL VARIABLE FREQUENCY DRIVE (VFD) ON FANS

Variable frequency drives allow for the control of a motor by varying the frequency and voltage supplied to the motor. When equipped, the fan drives are placed in an outdoor rated enclosure that is attached to either the front or right side next to the exhaust (See **FIGURE 12** on **PAGE 26**).

YASKAWA V1000 VFD INFORMATION

LEDS FOR THE YASKAWA V1000

LED	ON	FLASHING	OFF
ALM	A FAULT HAS OCCURRED	WHEN AN ALARM OCCURS	NORMAL STATE (NO FAULT OR ALARM)
REV	MOTOR IS ROTATING IN REVERSE	—	MOTOR IS ROTATING FORWARD
DRV	DRIVE MODE / AUTO-TUNING	WHEN DRIVEWORKSEZ IS USED	PROGRAMMING MODE
FOUT	DISPLAYS OUTPUT FREQUENCY (HZ)	—	—
LO/RE	WHEN RUN COMMAND IS SELECTED FROM LED OPERATOR (LOCAL)	—	RUN COMMAND IS SELECTED FROM REMOTE DEVICE
RUN	DURING RUN	DURING DECELERATION TO STOP RUN COMMAND IS PRESENT BUT THE FREQUENCY REFERENCE IS ZERO	DURING STOP

FUNCTIONS FOR THE YASKAWA V1000

The drive functions are accessible using the up and down arrows from the main menu:

FUNCTION	DISPLAY	DESCRIPTION
FREQUENCY REFERENCE DISPLAY	F 0.00	ALLOWS USER TO MONITOR AND SET THE FREQUENCY REFERENCE WHILE THE DRIVE IS RUNNING.
FORWARD/REVERSE	FOR / REV	INDICATES IF MOTOR IS ROTATING FORWARD OR IN REVERSE.
OUTPUT FREQUENCY DISPLAY	0.00	MONITORS THE FREQUENCY OUTPUT BY THE DRIVE.
OUTPUT CURRENT DISPLAY	0.00A	MONITORS THE OUTPUT CURRENT OF THE DRIVE.
OUTPUT VOLTAGE REFERENCE	0.0V	MONITORS THE OUTPUT VOLTAGE OF THE DRIVE.
MONITOR DISPLAY	MON	MONITOR PARAMETERS ARE DISPLAYED.
VERIFY FUNCTION	VRFY	LISTS ALL PARAMETERS THAT HAVE BEEN EDITED OR CHANGED FROM DEFAULT SETTINGS.
SETUP GROUP PARAMETERS	STUP	A SELECT LIST OF PARAMETERS NECESSARY TO GET THE DRIVE OPERATIONAL QUICKLY.
ALL PARAMETERS	PAR	ALLOWS THE USER TO ACCESS AND EDIT ALL PARAMETER SETTINGS.
AUTO-TUNING	ARUN	MOTOR PARAMETERS ARE CALCULATED AND SET AUTOMATICALLY.

START/STOP CONTROL — YASKAWA V1000

TOGGLE BETWEEN REMOTE AND LOCAL CONTROL.

NOTE: Drive MUST be in a STOP condition before control can be switched.

1) Pressing "LO/RE" key will toggle between LOCAL/REMOTE Control. LOCAL Control is active when LO/RE key's LED is GREEN.

FOR REMOTE CONTROL, CHOOSE REMOTE (RE) CONTROL.

"START/STOP" contact closure between S1-SC and 0-10V analog input at terminals A1-AC will control Drive.

1) Press "ESC" key until left-most part of Drive's display shows "F". "DRV" LED will also be lit. Frequency Reference is displayed.

2) Press "UP" arrow twice to view Drive's Output Frequency. "FOUT" LED will also be lit. This is not required to run Drive.

3) To RUN, close contact between S1-SC. Drive's Output Frequency is defined by 0-10Vdc input at terminals A1-AC.

4) To STOP, open contact between S1-SC.

FOR MANUAL CONTROL, CHOOSE LOCAL (LO) CONTROL.

(LOCAL is active when LO/RE key's LED is GREEN.) "RUN", "STOP" and keypad entered Frequency Reference setpoint will control Drive.

1) Press "ESC" key until left-most part of Drive's display shows "F". "DRV" LED will also be lit. Frequency Reference is displayed.

2) Using ARROWS, adjust Frequency. Change is automatic when Parameter (02-05=1) otherwise ENTER key must be pressed

3) To RUN, simply press RUN key. To view actual Output Frequency, press "UP" arrow twice. "FOUT" LED will also be lit.

4) To STOP, simply press STOP key.

TROUBLESHOOTING THE YASKAWA V1000

A failure in the drive can fall into one of two categories, Alarm or Fault.

When the drive detects a fault:

- The digital operator displays text that indicates the specific fault and the ALM indicator LED remains lit until the fault is reset.
- The fault interrupts drive output and the motor coasts to a stop.
- It will remain inoperable until that fault has been reset.

When the drive detects an alarm or a minor fault:

- The digital operator displays text that indicates the specific alarm or minor fault and the ALM indicator LED flashes.
- The motor does not stop.
- The digital operator displays text that indicates the specific alarm or minor fault and the ALM indicator LED flashes.
- Remove the cause of an alarm or minor fault to automatically reset.

In the event of an alarm or fault consult the Yaskawa V1000 Technical Manual, available at www.drives.com, or contact the FläktGroup SEMCO DWP Technical Service for assistance.

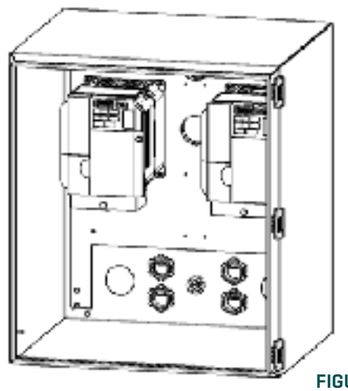

FIGURE 12: VFD Enclosure

PROGRAMMING THE FAN VFDS

(**NOTE:** For most V1000 Parameters, the Drive must be in a STOP condition while programming.)

1) Press "ESC" key until left-most part of Drive's display shows "F". "DRV" LED will also be lit.

2) Press "DOWN" arrow twice to display "PAr" then Press "ENTER" key. (Parameters are now accessible)

3) Using "UP/DOWN/RIGHT" ARROWS, select parameters to be read and/or changed starting with A1-01.

4) If required, use "RIGHT" ARROW or "ENTER" key to scroll to right-most digits of parameter name. Digits will flash.

5) Press "ENTER" key to read value.

6) Using "UP/DOWN/RIGHT" ARROWS, set desired value then press "ENTER" key to store value. (Drive will accept value, if valid, then re-display parameter number (ie B1-01, C1-02, etc).**7)** Start with Parameter A1-01. Make sure A1-01=2 to allow access to ALL parameters.

8) Repeat steps 3 -- 6 to program remaining parameters per application requirements.

9) When complete, press "ESC" key until left-most part of Drive's display shows "F". "DRV" LED will also be lit.

10) V1000 Drive is now ready to run.

PARAM. TITLE	FUNCTION	OPTIONS	DEFAULT SETTING	FLÄKTGROUP SEMCO SETTING	COMMENTS
*B1-01	FREQUENCY REFERENCE SELECTION 1	0: OPERATOR - DIGITAL PRESET SPEED D1-01 TO D1-17. 1: TERMINALS - ANALOG INPUT TERMINAL A1-A2. 2: MEMOBUS COMMUNICATIONS 3: OPTION PCB 4: PULSE INPUT (TERMINAL RP)"	1	0	SELECTS THE FREQUENCY REFERENCE SOURCE. CHANGE THIS PARAMETER TO 1 TO CONTROL FAN SPEED WITH 0-10 VDC SIGNAL (BY OTHERS).
B1-02	RUN COMMAND SELECTION 1	0: OPERATOR - RUN AND STOP KEYS ON THE DIGITAL OPERATOR. 1: DIGITAL INPUT TERMINALS 2: MEMOBUS COMMUNICATIONS 3: OPTIONAL CARD"	1	1	SELECTS THE RUN COMMAND INPUT SOURCE.
B1-03	STOPPING METHOD SELECTION	0: RAMP TO STOP 1: COAST TO STOP 2: DC INJECTION BRAKING TO STOP 3: COAST WITH TIMER (A NEW RUN COMMAND IS IGNORED IF RECEIVED BEFORE THE TIMER EXPIRES)"	0	1	SELECTS THE STOPPING METHOD WHEN THE RUN COMMAND IS REMOVED.
B1-07	LOCAL/REMOTE RUN SELECTION	0: EXTERNAL RUN COMMAND HAS TO BE CYCLED AT THE NEW SOURCE TO BE ACTIVED. 1: EXTERNAL RUN COMMAND AT NEW SOURCE IS ACCEPTED IMMEDIATELY."	0	1	DETERMINES THE OPERATION WHEN THE RUN COMMAND SOURCE IS SWITCHED FROM LOCAL TO REMOTE OR BETWEEN RUN SOURCE 1 AND 2 WHILE AN EXTERNAL RUN COMMAND IS ACTIVE AT THE NEW SOURCE.
B1-17	RUN COMMAND AT POWER UP	0: RUN COMMAND NOT ISSUED, NEEDS TO BE CYCLED 1: RUN COMMAND ISSUED, MOTOR OPERATION START"	0	1	DETERMINES THE OPERATION WHEN A RUN COMMAND IS ACTIVE AT THE POWER UP OF THE DRIVE.

PARAM. TITLE	FUNCTION	OPTIONS	DEFAULT SETTING	FLÄKTGROUP SEMCO SETTING	COMMENTS
B3-01	SPEED SEARCH SELECTION	0: DISABLED - SPEED SEARCH IS NOT AUTOMATICALLY PERFORMED AT START. 1: ENABLED - SPEED SEARCH IS AUTOMATICALLY PERFORMED AT START."	0	1	ENABLES/DISABLES THE SPEED SEARCH FUNCTION AT START.
C1-01	ACCELERATION TIME 1	0.0 to 6000.0	10	30	ACCELERATION TIME
C1-02	DECELERATION TIME 1	0.0 to 6000.0	10	30	DECELERATION TIME
*D1-01	FREQUENCY REFERENCE SELECTION 1	0.0 to 400.00	0	60	FAN REFERENCE SPEED WHEN B1-01 IS SET TO 0.
E1-01	INPUT VOLTAGE	200 to 240 380 to 480	230 460	208 480	SET TO NOMINAL VFD INPUT VOLTAGE.
E1-03	V/F PATTERN	Ø to F	F	1	—
E2-01	MOTOR RATED CURRENT	10 TO 200% OF DRIVE RATED CURRENT	kVA DEPENDENT	SEE TABLE	MOTOR NAMEPLATE FLA
E2-03	MOTOR NO LOAD CURRENT	0 TO LESS THAN E2-01	kVA DEPENDENT	SEE TABLE	MOTOR NO-LOAD CURRENT
H1-03	TERMINAL S3	1 to 9F	24	F	MULTI FUNCTION DIGITAL INPUT TERMINAL S3 FUNCTION SELECTION (NOT USED)
L3-06	STALL RUN LEVEL	30 to 200	120%	SEE TABLE	STALL PREVENTION LEVEL DURING RUN
L4-05	FREQUENCY REFERENCE LOSS DETECTION SELECTION	0: STOP - DRIVE WILL STOP. 1: RUN AT L4-06 LEVEL - DRIVE WILL RUN AT THE PERCENTAGE SET IN L4-06 OF THE FREQUENCY REFERENCE BEFORE LOSS."	0	0	SETS OPERATION WHEN THE FREQUENCY REFERENCE IS LOST.
L5-01	NUMBER OF AUTO RESTART ATTEMPTS	0 to 10	0	5	SETS THE COUNTER FOR THE NUMBER OF TIMES THE DRIVE ATTEMPTS TO RESTART ON CERTAIN FAULTS.
*T1-01	AUTO-TUNING MODE SELECTION	0: ROTATIONAL AUTO-TUNING 2: STATIONARY AUTO-TUNING FOR LINE-TO-LINE RESISTANCE 3: ROTATIONAL AUTO-TUNING FOR V/F CONTROL (NECESSARY FOR ENERGY SAVINGS AND SPEED ESTIMATION TYPE SPEED SEARCH)"		2	SELECTS THE AUTO-TUNING MODE.
T1-02	MOTOR RATED POWER	0.00 to 650.00 kW		SEE TABLE	SETS THE MOTOR RATED POWER IN KILOWATTS (KW).
T1-04	MOTOR RATED CURRENT	10 TO 200% OF DRIVE RATED CURRENT	kVA DEPENDENT	SEE TABLE	MOTOR NAMEPLATE FLA

*Auto Tuning Parameters

FV FAN VFD PARAMETER REFERENCE TABLE

208V FAN VFD PARAMETERS

HP:	0.33	0.75	1.5	2	3	5	7.5	10	15
VOLTAGE:	208	208	208	208	208	208	208	208	208
E2-01	1.50	2.50	4.80	6.00	8.60	14.00	20.50	27.40	40.00
E2-03	0.60	1.00	1.92	2.40	3.44	5.60	8.20	10.96	16.00
L3-06	55%	91%	96%	75%	108%	86%	82%	110%	120%
T1-02	0.25	0.56	1.12	1.49	2.24	3.73	5.60	7.46	11.19
T1-04	1.50	1.30	4.80	6.00	8.60	14.00	20.50	27.40	40.00

480V FAN VFD PARAMETERS

HP:	0.33	0.75	1.5	2	3	5	7.5	10	15
VOLTAGE:	480	480	480	480	480	480	480	480	480
E2-01	0.70	1.20	2.40	2.90	3.90	6.30	9.30	12.40	18.60
E2-03	0.28	0.48	0.96	1.16	1.56	2.52	3.72	4.96	7.44
L3-06	40%	69%	70%	85%	87%	86%	101%	85%	97%
T1-02	0.25	0.56	1.12	1.49	2.24	3.73	5.60	7.46	11.19
T1-04	0.70	1.20	2.40	2.90	3.90	6.30	9.30	12.40	18.60

SERVICE

The FV module has a large access panel on the front of the unit. All maintenance can be performed through this panel. The unit should be installed with clearance in front of the unit at least equal to the unit depth to assure adequate access.

- All key components including fans and wheel cassette are removable through the service panel.
- The rotor is supported by permanently lubricated wheel bearings for minimal maintenance and long life.
- Electrical panels utilize breakers to eliminate the need for fuses (when possible).
- Fluted media structure provides for laminar flow through the wheel thereby avoiding media plugging due to dust and debris.
- Intake hood/filter limits snow and rain from entering the unit.

MAINTENANCE

FILTERS

Indoor FV units utilize a two-inch pleated 30/30 filter for the supply air stream and either one-inch deep industrial grade aluminum mesh filter or two-inch pleated 30/30 for the return air stream. All outdoor FV units utilize one-inch deep industrial grade aluminum mesh filters with an optional two-inch for the supply and either one-inch or two-inch for the return air streams. The aluminum mesh filters can be removed and washed. We suggest that the filters be washed or replaced a minimum of once every four months. Replacement filters are readily available through FläktGroup SEMCO or locally through HVAC supply distributors.

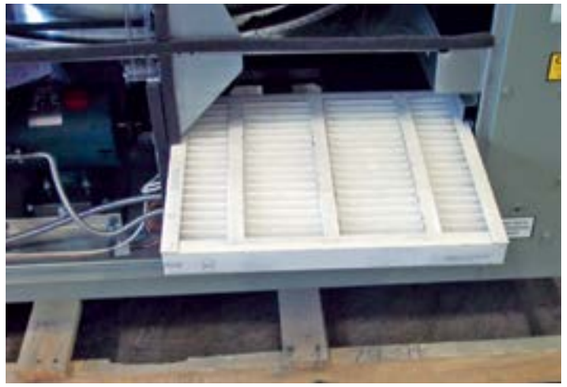

FIGURE 13. Replacing return air filters.

FILTER SIZES AND QUANTITIES

MODEL NUMBER	UNIT TYPE	OUTSIDE AIR FILTERS	RETURN AIR FILTERS	FILTER CLIPS
FV-1000	INDOOR	(1) 2x16x25	(1) 1x16x25 **or** (1) 2x16x25	N/A
	OUTDOOR	(1) 1x16x25 **or** (1) 1x16x25 + (2) 2x16x25		(4) OA - 1" or 3"
FV-2000	INDOOR	(2) 2x16x20	(2) 1x16x20 **or** (2) 2x16x20	N/A
	OUTDOOR	(2) 1x16x20 **or** (2) 1x16x20 + (2) 2x16x20		(8) OA - 1" or 3"
FV-3000	INDOOR	(2) 2x20x20	(2) 1x20x20 **or** (2) 2x20x20	N/A
	OUTDOOR	(2) 1x20x20 **or** (2) 1x20x20 + (2) 2x20x20		(8) OA - 1" or 3"
FV-4000	INDOOR	(4) 2x16x25	(3) 1x16x25 **or** (3) 2x16x25	N/A
	OUTDOOR	(4) 1x16x25 **or** (4) 1x16x25 + (4) 2x16x25		(16) OA - 1" or 3"
FV-5000	INDOOR	(4) 2x16x25	(3) 1x16x25 **or** (3) 2x16x25	N/A
	OUTDOOR	(4) 1x16x25 **or** (4) 1x16x25 + (4) 2x16x25		(16) OA - 1" or 3"
FV-7500	INDOOR	(6) 2x16x20	(6) 1x16x20 **or** (6) 2x16x20	N/A
	OUTDOOR	(6) 1x16x20 **or** (6) 1x16x20 + (6) 2x16x20		(24) OA - 1" or 3"
FV-9000	INDOOR	(6) 2x16x20	(6) 1x16x20 **or** (6) 2x16x20	N/A
	OUTDOOR	(6) 1x16x20 **or** (6) 1x16x20 + (6) 2x16x20		(24) OA - 1" or 3"

All dimensions in inches.

OUTDOOR AIR HOOD

The Outdoor Air Hood is utilized with the outdoor application of the FV and is palletized separately from the unit to minimize damage incurred during shipment. The filters that accompany the hood will be found within the cabinet (replacement filters will also be found in this location) along with filter clips, screws and caulk. Take the following steps to install the hood.

When viewing the unit from the access door side, the Outdoor Air Hood will be mounting to the left hand side. Orient hood as shown in **FIGURE 14**. Filters are intended to lay in the horizontal position. Clearance holes have been provided for ease of mounting.

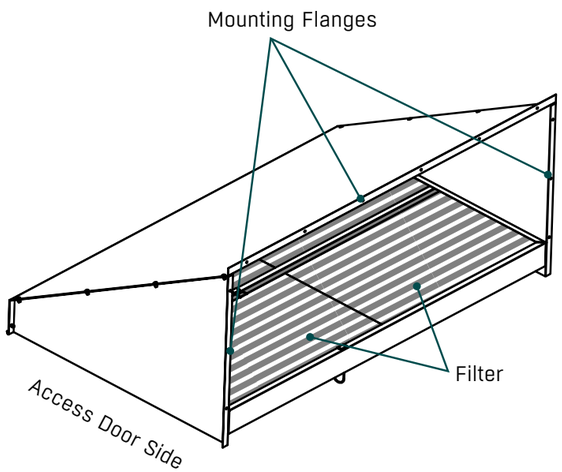

FIGURE 14. Outdoor Air Hood Installation.

Place caulk along the flanges that will mount to the left side of the unit. Align the clearance holes with the existing holes on the panel and use the sheet metal screw provided as means for joining. The hood will be fastened along the front, top, and back sides. Further caulking should be done along the flange edges to seal the hood from water penetration opportunities.

NOTE: if an electrical preheat is present, the hood will mount to the flanges provided by the electric heater. There will be no alignment holes on the heater itself. Ensure placement of the hood is such that no openings are present to allow for water seepage into the electrical heater. It is vital that the integrity of the electrical enclosure not be compromised; **DO NOT** screw into the electrical enclosure. Instead, fasten the bottom angle within the hood as well as the top and back flanges to the electric heater flange.

Attach the filter clips to the angles provided within the hood. There should be four clips for each filter. The hood can accommodate either one-inch metal mesh filters, or a combination of the one-inch metal mesh and the two-inch pleated 30/30 filters through use of 1" or 3" filter clips, respectively. The combination of filters should be arranged so that the metal mesh filter is the first filter passed through by the air entering the unit, ensuring any large debris will not puncture the pleated 30/30 filter (they will share the same filter clip).

The filters can then be inserted by quarter-turning the filter clips, placing the filter, and turning the clips back so that the clip lies in the position so indicated by **FIGURE 17.**

FIGURE 15

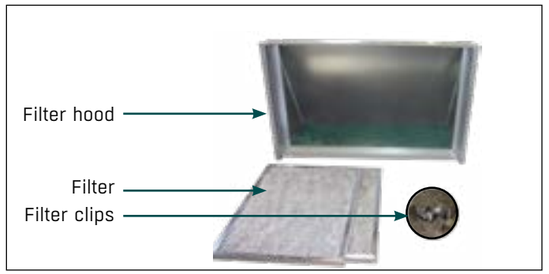

FIGURE 16

Attach filter clips to angles provided within the hood - four clips for each filter.

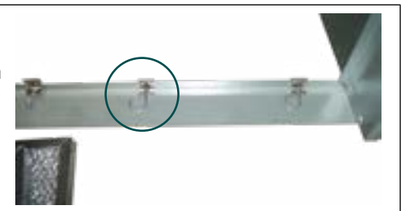

FIGURE 17

Insert filters by quarter-turning filter clips, placing the filter, and turning the clips back

INDOOR DUCT INTAKE

The Indoor Duct Intake is utilized with the indoor application of the FV and is palletized separately from the unit to minimize damage incurred during shipment. The filters that accompany the hood will be found within the cabinet (replacement filters will also be found in this location) along with screws and caulk. Take the following steps to install the intake.

When viewing the unit from the access door side, the Indoor Duct Intake will be mounting to the left hand side. Orient Intake as shown in **FIGURE 18**, the access door should face the same direction as the access door of the unit. Clearance holes have been provided for ease of mounting.

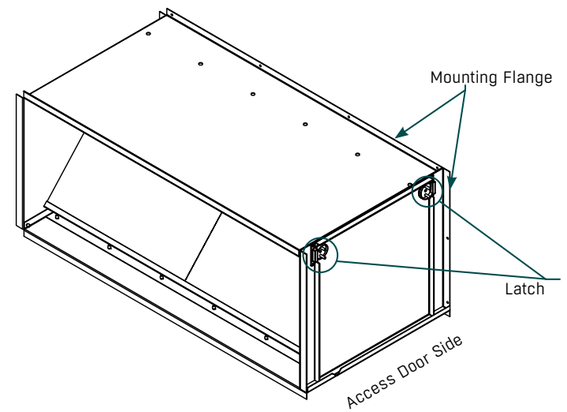

FIGURE 18. Indoor Duct Intake

Place caulk along the flanges that will mount to the left side of the unit. Align the clearance holes with the existing holes on the panel and use the sheet metal screw provided as means for joining. The hood will be fastened along the front, top, back, and bottom sides.

Note: if an electrical preheat is present, the Intake will mount to the flanges provided by the electric heater. There will be no alignment holes on the heater itself. Ensure placement of the intake is such that no openings are present. It is vital that the integrity of the electrical enclosure not be compromised; DO NOT screw into the electrical enclosure. Instead, fasten only the back, top, and bottom sides to the flanges of the electric heater.

The intake can accommodate two-inch pleated 30/30 filters. The filters can be inserted by turning the two latches placed on the access door of the intake. The access door can then be removed and the filters will slide in. Replace access door and lock the latches by turning.

WHEEL CASSETTE

The wheel cassette can be serviced through the front panel. The cassette can be slid out for easy access. To remove the cassette, unplug the leads to the wheel drive motor, then remove the (2) tek screws located near the opening. This will then allow you to pull the cassette out of the unit through the access door. If the unit is equipped with a rotation sensor, it must be removed prior to sliding the cassette out.

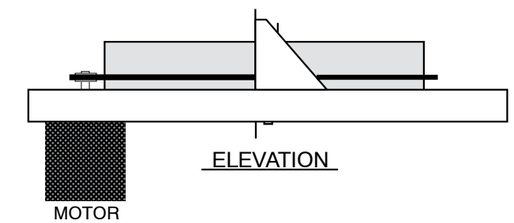

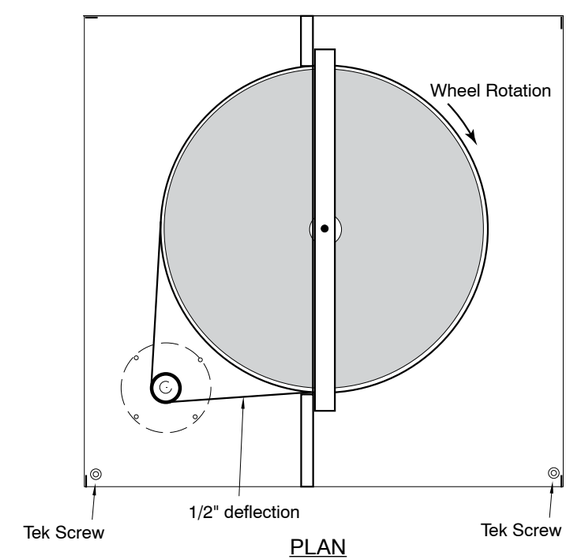

SEALS

Surrounding the rim of the wheel is a brush seal. Running along the upper and lower wheel cassette crossmembers are brush seals that contact with the face of the wheel. Do not tamper with these seals. No maintenance of the seals is required.

MEDIA

For normal inspection and maintenance, the wheel cassette may be pulled out (like a drawer) of the metal enclosure of the unit (See **FIGURE 19**). **Prior to sliding out the wheel cassette, the wheel motor quick releases, and the rotation detector sensor must be disconnected.**

The Fusion 3Å wheel uses laminar flow technology to resist plugging and the accumulation of dust particles, therefore cleaning is usually not necessary. Constant back flushing occurs due to Supply Air and Return Air streams that move through media flutes to help keep them clean. As the media moves constantly from one air stream to the other most dirt is either passed through or blown away.

Should your application require occasional rotor cleaning, the media may be cleaned with a vacuum, compressed air (at 50 PSI max), low-pressure steam (5 PSI max), or hot water (130° F, 30 PSI max). Care should be taken to avoid bending or damaging flutes. The nozzle should be no closer than 6" from the media and should be held at a right angle to the face of the wheel. A soft brush can also be used to loosen any dirt from the face of the wheel. In general, detergents or solvents are not recommended as they may degrade the materials used to bind the desiccant to the aluminum surface in the media. If it is determined that additional cleaning power is required, light duty household cleaners (such as Simple Green® etc.) can be used.

BELTS

The wheel drive and fan drive systems utilize a PowerTwist Plus™ belt or continuous V-belt. Periodic adjustment of the belt will be necessary. We suggest the belt be checked for sufficient tension at a minimum of once every six months. Take care to follow the directions on the following pages for instructions on measuring, assembling, and installing PowerTwist Plus V-Belts.

MODEL	FV-1000	FV-2000	FV-3000	FV-4000
LINKBELT TYPE	4L/"A"	4L/"A"	4L/"A"	4L/"A"
LINKBELT BELT LENGTH	83"	108"	134"	152"
CONTINUOUS V-BELT LENGTH	80"	105"	130"	146"

MODEL	FV-5000	FV-7500	FV-9000
LINKBELT TYPE	4L/"A"	4L/"A"	4L/"A"
LINKBELT BELT LENGTH	164"	200"	200"
CONTINUOUS V-BELT LENGTH	159"	193"	193"

FIGURE 19. Prior to sliding out the wheel cassette, the wheel motor quick releases, and the rotation detector sensor must be disconnected.

FAN BEARINGS (FV-7500 & FV-9000 ONLY)

The fan bearings for the FV-7500 and FV-9000 require lubrication at a regular interval. Hours of operation, temperature and surrounding conditions will affect the lubrication frequency required. Therefore, when applying grease, observe the condition of the grease expelled from the bearings and note the amount of grease used. Both observations will suggest whether or not the lubrication schedule should be increased or decreased. Start with an initial monthly interval, and use a high quality NLGI No. 2, lithium soap grease with petroleum oil.

Also note that all bearings are originally filled with grease at the factory. When the fans are started, the bearings may discharge excess grease though the seals for a short period of time. If so, it is not necessary to replace this initial discharge. Lubricate bearings prior to extended shutdown or storage and rotate the shaft monthly to aid corrosion protection.

AIRFLOW DAMPERS

All outdoor FV units have airflow dampers on the supply air intake and exhaust air outlet that are field adjustable. FV units installed indoors do not have an exhaust airflow damper and one must be provided in the ductwork. However, a motorized exhaust is optional in both outdoor and indoor installations.

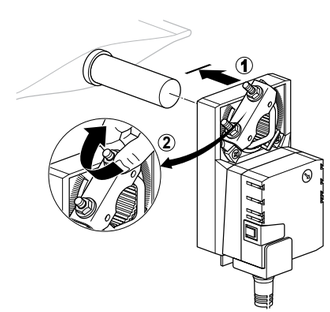

FIGURE 20

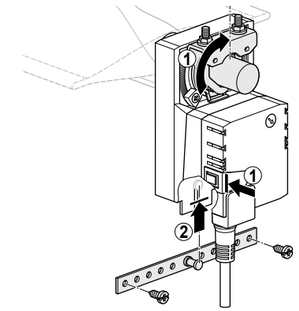

FIGURE 21

SUPPLY

To adjust the Supply / Outside Air flow damper, turn the FV unit off without shutting off the main power.

Open the access door and observe the damper, allow it to finish moving through its stroke to the full closed position, then turn off main power to the unit.

Confirm the damper is now fully closed, but the actuator is 5° from fully closed, (1/16" to 1/8" between stop and clamp), See **FIGURE 22**. This is called "pre-loading" the actuator. When the actuator is powered and sent to the closed position it will put its full torque on the shaft compressing the edge and blade seals. The actuator is electronically protected from overload and will not be damaged.

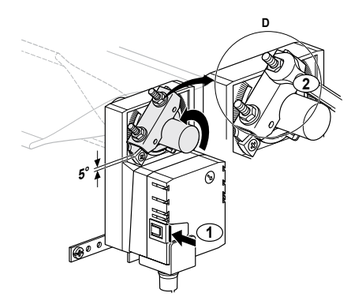

FIGURE 22

If "pre-load" setting requires adjustment follow the two step procedure listed below. If "pre-load" is correct, skip these two steps.

1) Press the manual override and turn the damper shaft until the blades are fully closed.

2) Loosen the nuts on the universal clamp. Press the manual override button and rotate the clamp to about 5˚ from fully closed, (1/16" to 1/8" between stop and clamp). Tighten the two nuts on the universal clamp with a 10 mm wrench (See **FIGURE 22**).

You have now confirmed or adjusted correct the fully closed position of the damper.

The factory-set open damper position is fully open against the mechanical limit screw in the frame of the damper. The limit screw must be left in place to prevent the damper blade from contacting the energy recovery wheel.

TESTING THE INSTALLATION

1) Without power, disengage the gear train with the manual override button (1) and move the shaft from closed to open to closed. Ensure that there is no binding and that the damper goes fully open and closes with 5° of the actuator stroke left.

2) Correct any problems and retest.

EXHAUST

To adjust the exhaust airflow damper, turn the unit off and remove the nut/bolt stops on both sides of exhaust hood. Reposition the nut/bolt stops in the desired adjusting holes and re-tighten, ensuring the exhaust damper is now between the exhaust outlet and nut/bolt stops (See **FIGURE 23**). Be sure to use matching adjusting hole on both sides of the exhaust hood. Readjust the stops as necessary to obtain the desired airflow. The exhaust airflow damper will automatically open to the set position when the exhaust fan is on, and close when the exhaust fan is off.

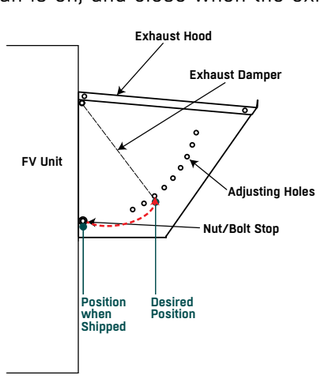

FIGURE 23. Exhaust hood damper.

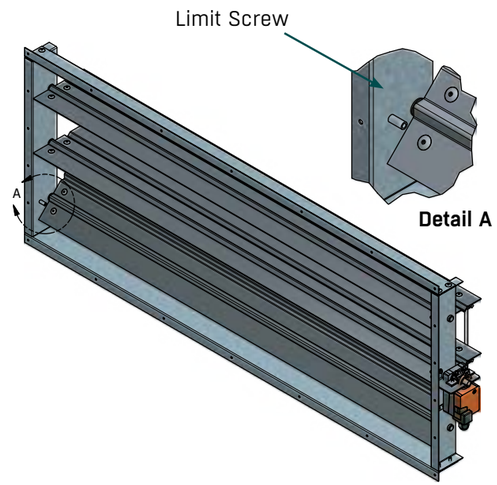

FIGURE 24. Outside air intake damper assembly

OPTIONAL MOTORIZED EXHAUST

To adjust the Exhaust Air flow damper, turn the FV unit off without shutting off the main power.

Observe the damper, allow it to finish moving through its stroke to the full closed position, then turn off the main power to the unit.

Confirm the damper is now fully closed (position a in **FIGURE 25**), but the actuator is 5˚ from fully closed. This is called "pre-loading" the actuator. When the actuator is powered and sent to the closed position it will put its full torque on the shaft compressing the edge and blade seals. The actuator is electronically protected from overload and will not be damaged.

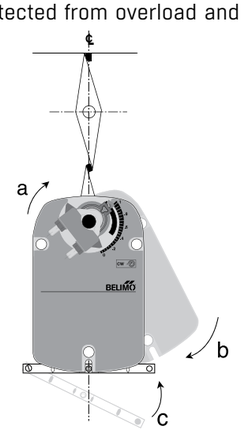

FIGURE 25 Standard mounting of optional motorized exhaust actuator

FIGURE 20.

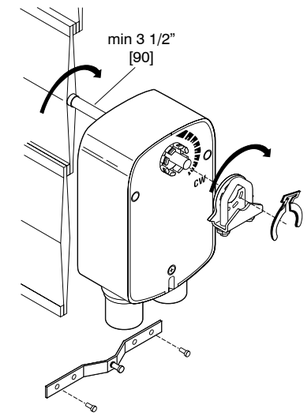

FIGURE 26

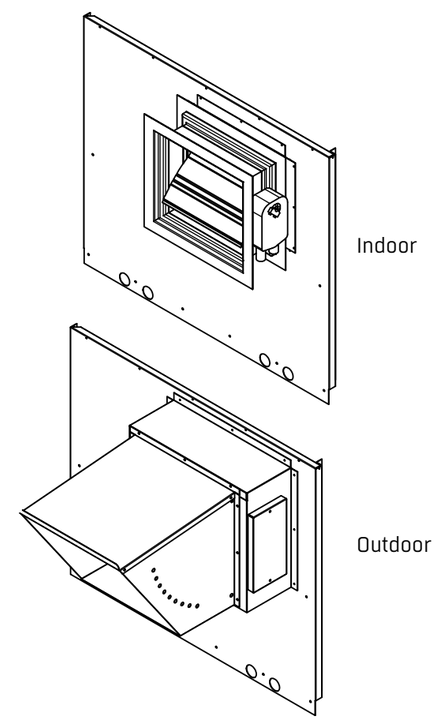

FIGURE 27. Optional motorized exhaust damper.

If "pre-load" setting requires adjustment, follow the procedure listed on the next page. Otherwise, skip these steps.

"PRE-LOAD" SETTING ADJUSTMENT

1) For outdoor applications, remove cover over the actuator accessible from the rear of the unit.

2) Remove the screw from one end of the mounting bracket and pivot it away from the actuator.

3) Loosen the universal clamp and, making sure not to move the damper shaft, rotate the actuator approximately 5 degrees in the direction which would open the damper.

4) Tighten the universal clamp to the shaft.

5) Rotate the actuator to apply pressure to the damper seals (see **B** in **FIGURE 25**) and re-engage the anti-rotation strap (see **C** in **FIGURE 25**).

6) Tighten all fasteners.

7) You have now confirmed or adjusted correct the fully closed position of the damper.

HOW TO MEASURE, ASSEMBLE AND INSTALL POWERTWIST PLUS™ V-BELTS

MEASURING THE BELT

- Pull belt tight around sheaves to check hand tight length, overlapping the last two tabs with two holes in matching links as shown in **FIGURE 28**.

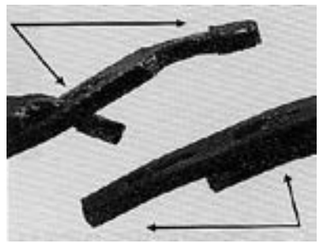

FIGURE 28. Measuring the V-Belt

- Count the number of links and remove one link for every 24 of O/3L, A/4L and B/5L sections and one link for every 20 of C section.
- This gives the correct installed belt length and will ensure optimum belt tension when running.

NOTE: Every tenth link is designated with an arrow. For multiple belt drives, ensure that each belt has the same number of links.

DISASSEMBLY

1) Hold belt upside down. Bend back as far as possible: hold with one hand. Twist one tab 90° parallel with slot.

2) Pull end of link over tab.

3) Rotate belt end with tab 90°.

4) Pull belt end through two links.

ASSEMBLY

1) Hold belt with tabs pointing outward.

2) Place end tab through two links at once.

3) Flex belt further and insert second tab through end link by twisting tab with thumb.

4) Ensure tab returns to position across belt. Reverse belt so tabs run inside.

NOTE: Turn belt inside out (as shown above) to ensure easy assembly and disassembly.

INSTALLATION

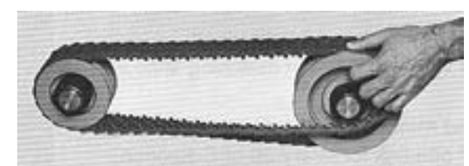

1) Turn belt with tabs to the inside before installing.
2) Determine direction of drive rotation.
3) Align belt directional arrow with drive rotation.
4) Fit belt in nearest groove of smaller sheave.
5) Roll belt onto larger sheave, turning the drive slowly. Belt may seem very tight; this is okay. DO NOT jog motor.
6) Check to see all tabs are still in their correct position and are not twisted out of alignment.

For multiple belt drives, work belt from groove to groove. On particularly wide drives, it may be easier to install half the belts from the inboard side and half from the outboard.

NOTE: With drive ratios around 1:1, it may be necessary to add back one link to allow belts to be rolled on. This does not apply if using **ALTERNATIVE INSTALLATION METHOD**.

ALTERNATIVE INSTALLATION METHOD

1) Set motor to mid-position of adjustment range and mark base clearly.
2) Determine required belt length as in "Measuring Belt Length."
3) Push motor forward to minimum center distance.
4) Install belts as in "Installation."
5) Pull motor back to previously marked mid-position.

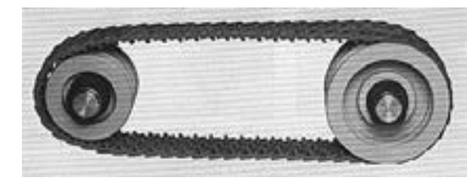

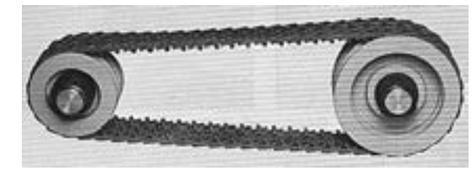

RETENSIONING

Like all high performance V-belts, PowerTwist Plus™ V-Belts require the maintenance of correct drive tension to operate efficiently. Experience indicates that drive tension should be checked after 24 hours running at full load. A retension may be necessary depending on the severity of the drive. Any initial belt stretch is then taken up. Subsequently, belt tension should be checked periodically and adjusted when necessary.

THIS PAGE WAS INTENTIONALLY LEFT BLANK

THIS PAGE WAS INTENTIONALLY LEFT BLANK

THIS PAGE WAS INTENTIONALLY LEFT BLANK

THIS PAGE WAS INTENTIONALLY LEFT BLANK

FläktGroup®
SEMCO®

WWW.SEMCOHVAC.COM / FV SERIES / 20240605

FläktGroup SEMCO delivers smart, energy-efficient, air-quality solutions to support every building application. We offer our customers innovative technologies, high-quality products and outstanding performance supported by more than fifty years of accumulated industry experience. The broadest offering on the market and a strong market presence in 65 countries worldwide guarantees that we are always by your side, ready to deliver: Excellence in Solutions.

FläktGroup SEMCO
Corporate Headquarters
1800 East Pointe Drive
Columbia, Missouri 65201 USA

573.443.1481

sales.semco@flaktgroup.com

U.S. GREEN BUILDING COUNCIL MEMBER

To learn more about FläktGroup® SEMCO® offerings and to contact your nearest representative please visit **www.semcohvac.com**

© Copyright 2025 SEMCO LLC. All Rights Reserved. SEMCO embraces a policy of continuous development and improvement, the right is reserved to supply products which may differ from those illustrated and described in this publication. Certified dimensions will be supplied upon request on receipt of order. The SEMCO logo and SEMCO are registered trademarks of SEMCO LLC. PowerTwist Plus is a registered trademark of Fenner Drives.