FläktGroup®

SEMCO®

JUNO IQHC

ACTIVE CHILLED BEAM

OWNER'S MANUAL

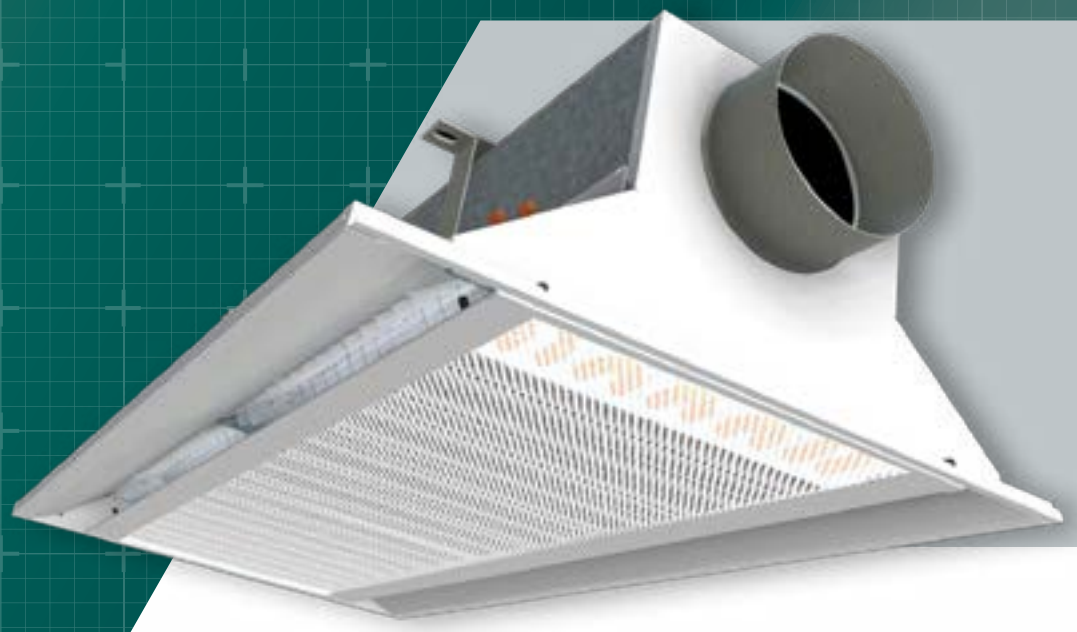

TABLE OF CONTENTS

Introduction 1

Dimensions and Weights 1

Standard Submittal: Active Chilled Beams 1

Pre-Installation 2

Receiving and Inspection 2

System Installation 2

Air and Water Connections 4

Systems Flushing 5

Energy Control 6

Air Flow Distribution Options: 6

Flow Pattern Control 6

Maintenance 8

© SEMCO 1995-2023. All rights reserved.

The information in this owner's manual is furnished for informational use only, is subject to change without notice, and should not be construed as a commitment by SEMCO LLC. SEMCO LLC assumes no responsibility for any errors that may appear in this owner's manual.

No part of this publication may be reproduced, stored in a retrieval system or transmitted, in any form or by any means, electronic, mechanical, recording, or otherwise, without the prior written permission of SEMCO LLC.

© SEMCO LLC 2023 All Rights Reserved. SEMCO and the SEMCO logo are registered Trademarks of SEMCO LLC. All other trademarks are registered to their respective companies.

INTRODUCTION

This manual describes how to store, clean, install and maintain FläktGroup® SEMCO® Juno IQHC chilled beams. Each section provides information to guide the installation and maintenance of all components. It should also be noted that a section or sections of this manual might not apply to your system.

DIMENSIONS AND WEIGHTS

OVERALL LENGTH (OAL)	
NOMINAL	ACTUAL
2'	23.75"
3'	35.75"
4'	47.75"
5'	59.75
6'	71.75"
7'	83.75"
8'	93.75"
9'	107.75"
10'	119.75"

FIGURE 1. Overall Lengths (OAL)

WEIGHT		
LENGTH (FT)	DRY (LBS)	WET (LBS)
2'	26	28
3'	38	41
4'	50	53
5'	62	66
6'	75	78
7'	87	91
8'	99	103
9'	111	116
10'	123	128

FIGURE 2. Weights

STANDARD SUBMITTAL: ACTIVE CHILLED BEAMS

A) GENERAL:

1) Chilled beam to be an integrated system for ventilation and cooling. The beams shall consist of a steel housing encasing the integral sensible cooling coil and a plenum feeding a series of adjustable induction slots, and a face including a grille and diffusers. Chilled beam to be active with primary ventilation introduced through end, side or top duct connection. Chilled beam shall be designed to be installed within a 24" wide ceiling tile grid hard ceiling, or exposed. Beam to have adjustable air flow, cooling effect, and flow pattern.

B) QUALITY ASSURANCE:

1) Hydronic cooling capacities shall be established by testing accordance with European standard EN-14518.

C) CASING:

1) Casing shall be manufactured of minimum 22 gauge galvanized steel. Beams are available in 1' increments, in lengths between 2' and 10'.
2) Bottom plate of chilled beam shall be removable without tools for coil access.
3) Beam face shall consist of a room air induction section of 50% free area perforated steel flanked by two linear supply slots. The entire visible face section shall be finished in white paint, or a color specified by the architect.
4) Each beam shall be provided with a pressure tap that may be used to measure the pressure differential between the primary air plenum and the room. An airflow method, which relates this pressure differential reading with the primary airflow rate, shall also be provided by the beam manufacturer.
5) The overall height of the beam shall not exceed 10.25".

D) COILS:

1) Coils shall be manufactured of minimum 0.5" seamless smooth copper tubes .016" tube thickness with 0.006" aluminum fins. Fins shall be spaced at a maximum of 12.5 fins per inch. A purging nipple shall be included with each beam.

2) Coils shall have a working pressure of at least 300 PSI, be factory tested for leakage at a minimum pressure of 360 PSI.

E) DUCT CONNECTION:

1) Six or eight inch diameter spin fit primary supply air duct connection to the Juno IQHC beam can be located at the side, end or top. An six (6) to eight (8) inch diameter duct reducer can only be located at the top of the chilled beam.

F) INDUCTION SLOTS:

1) The chilled beam shall be complete with velocity control, be regulated by means of variable geometry slots and beam shall provide either uni-or bi-directional supply

2) Slots will be adjustable without the need for tools or removal of the beam from its installation.

3) Slots will permit 0-100% airflow from each side of the beam with the opposing side providing the converse percentage.

4) Air measurement tubes shall be included, along with rated nameplate calculations for test and balance of primary airflow after installation.

G) FLOW PATTERN CONTROL:

1) Diffusers shall include optional, adjustable flow pattern control fins to adjust the airflow pattern at different angles 0+15+30+45 mounted within the air-outlet of the beam.

2) Flow pattern control shall be provided in sections for multi-directional airflow through the length of the beam (minimum of two flow pattern controls per beam).

3) No tools shall be required for adjustment of the flow pattern control.

* *Flow pattern control is not available on security beams.*

H) CONTROLS:

1) Automatic Temperature Controls shall be provided by others.

2) Chilled beams may be supplied with condensate sensor.

PRE-INSTALLATION

Chilled beams can accumulate dust, dirt and corrosive matter (like salt) during shipment. If chilled beams appear to be dirty when received, follow the maintenance instructions on **PAGE 7** to clean soon after arrival. Abrasives and solvents should not be used without first consulting FläktGroup® SEMCO®.

RECEIVING AND INSPECTION

Upon delivery, confirm that the quantity and model(s) received matches the bill of lading. If there is any discrepancy, immediately notify FläktGroup® SEMCO®.

Inspect the packages for signs of damage. If damage is suspected, contact FläktGroup® SEMCO® immediately. If no visible damage is apparent, the unit should be properly stored until installation.

If the chilled beams must be stored before installation, store indoors on a hard, dry surface and protected from damage and moisture.

SYSTEM INSTALLATION

SUPPORT:

1) Chilled beams shall be independently suspended from the structure above by four (4) cables (see **FIGURE 3**) or four (4) threaded rods of 3/8" diameter. The upper end of the rods may be anchored into the structure or suspended from metal channels that are:

a. Mounted perpendicular to the beam length

b. At least four inches wider than the beam

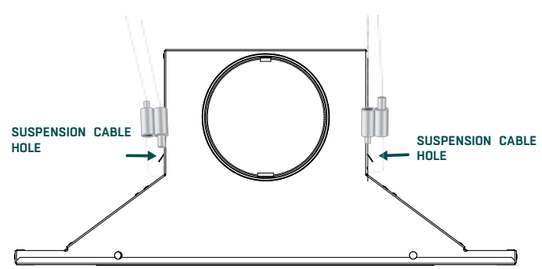

FIGURE 3. Cable suspension installation

2) Brackets shall be provided for rod installation (See **FIGURE 4**). These brackets will have a snap type connection with the beam that will allow for the beam to be repositioned along the length of the beam. The brackets will have oval mounting holes which will allow for the beam to have fine adjustment perpendicular to the length beam while the metal bracket will have gross adjustment along the same adjustment path.

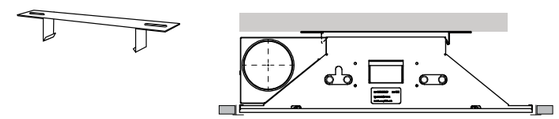

FIGURE 4. Juno IQHC hanging bracket.

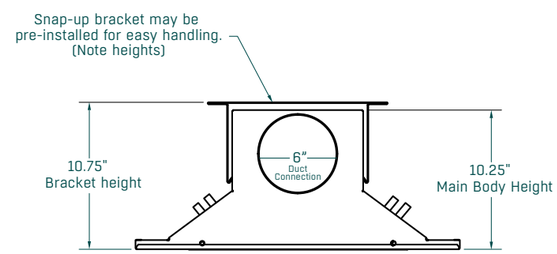

FIGURE 5. Bracket installation with heights.

3) The beam is then to be positioned within the acoustical ceiling grid and leveled horizontally by adjusting the nuts connecting the threaded rods to the beam.

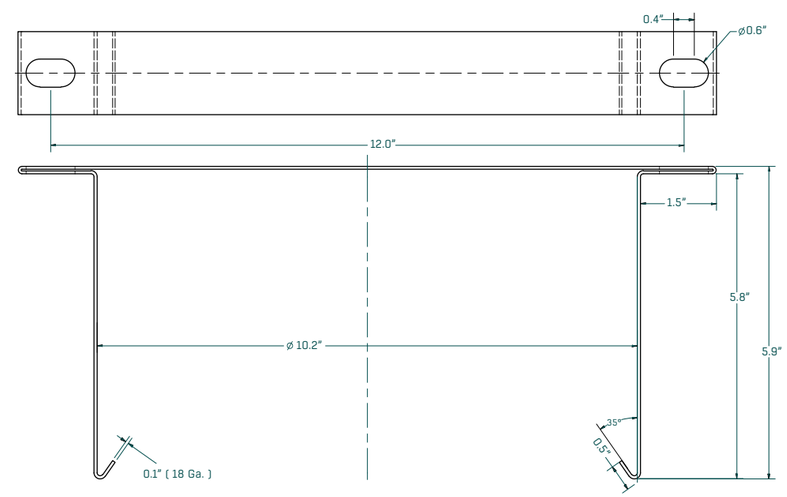

FIGURE 6. JUNO IQHC bracket detail.

COMMISSIONING SPREADSHEET

Available upon receipt of purchase order.

AIR AND WATER CONNECTIONS

1) Cut the four small tabs from the selected knock-out panel, best snipped with side cutters (See **FIGURE 7**).

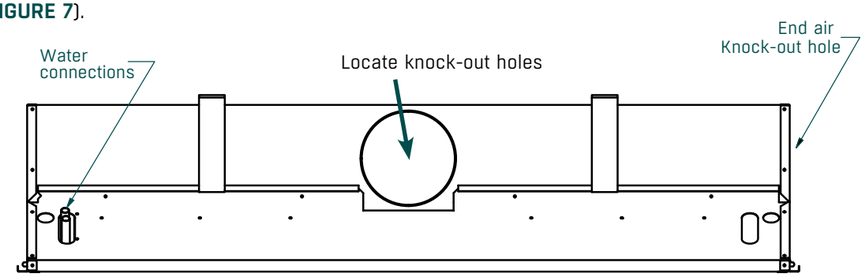

FIGURE 7. Water and duct connections (side view)

2) Cut the inner air seal layer with a utility knife.

3) Install the spin-in male fitting.

4) Aim the end of the tip to point up, or if installed in the top air location, have the ramp point to the close side of the air plenum. (Orientation is important for sound and performance. See **FIGURE 8**).

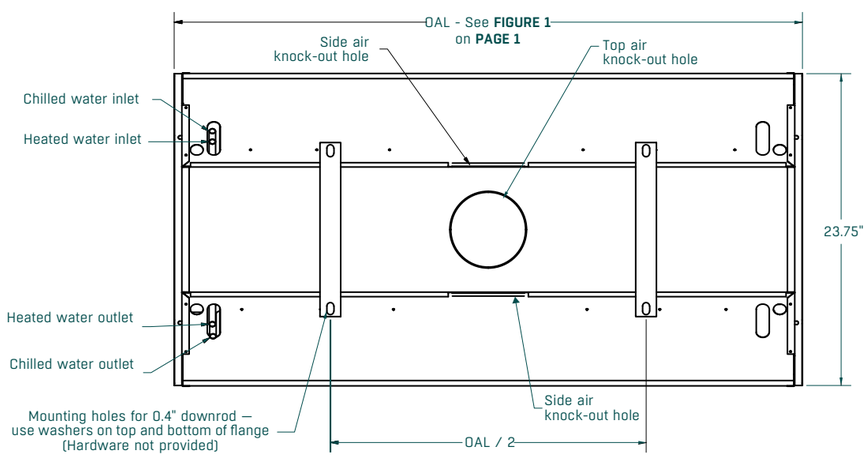

FIGURE 8. Water and duct connections (top view)

5) Seal with a perimeter bead of appropriate construction adhesive. FläktGroup SEMCO recommends 3M®'s #525 "Polyurethane Construction Sealant" or similar.

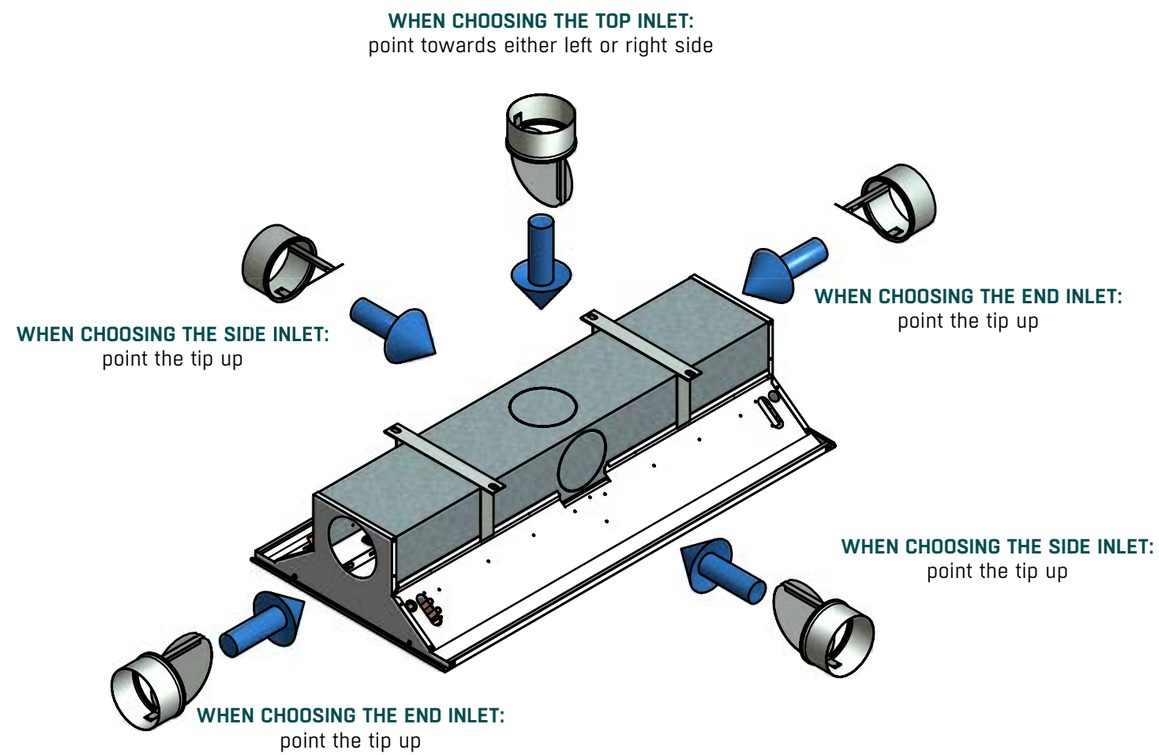

FIGURE 9. Air inlet connection

SYSTEMS FLUSHING

1) Before connecting the supply water system(s) to the beams, contractor shall flush the piping system to assure that all debris and other matter have been removed.

ENERGY CONTROL

1) The Juno IQHC energy control nozzles can be adjusted with just a screwdriver.

2) Air pressure must be checked at this time.

FIGURE 10. Energy control adjustment

AIR FLOW DISTRIBUTION OPTIONS:

One way distribution

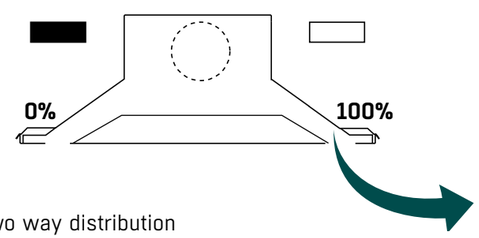

Two way distribution

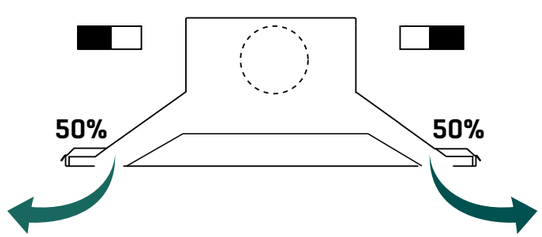

Asymmetric air diffusion

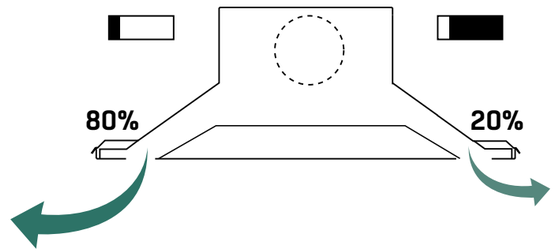

FLOW PATTERN CONTROL

The flow pattern control (FPC) function enables the Juno IQHC to be highly flexible. The combination of FPC and the patented energy control gives unique characteristics to this chilled beam.

Flow pattern control air deflectors, allow easy adjustment of air direction by simply repositioning the plastic blades as shown in **FIGURE 11**.

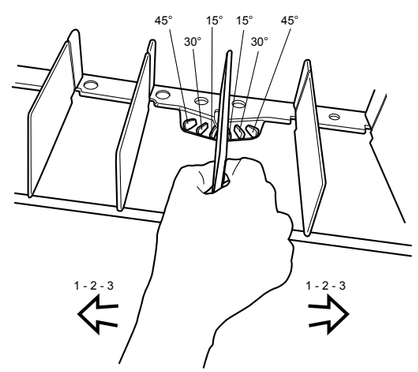

FIGURE 11. Flow pattern control air deflector plastic blade adjustment

FIGURE 12 shows an installation where air direction is set to 30° in two directions and the airflow is set with energy control to the same nozzle on each side. The installation options provide efficient and comfortable air throughout the room.

For high airflow applications, energy Control is in symmetrical setting (see **FIGURE 12**), while FPC blades set at 30° angle settings on opposing units to avoid colliding air streams.

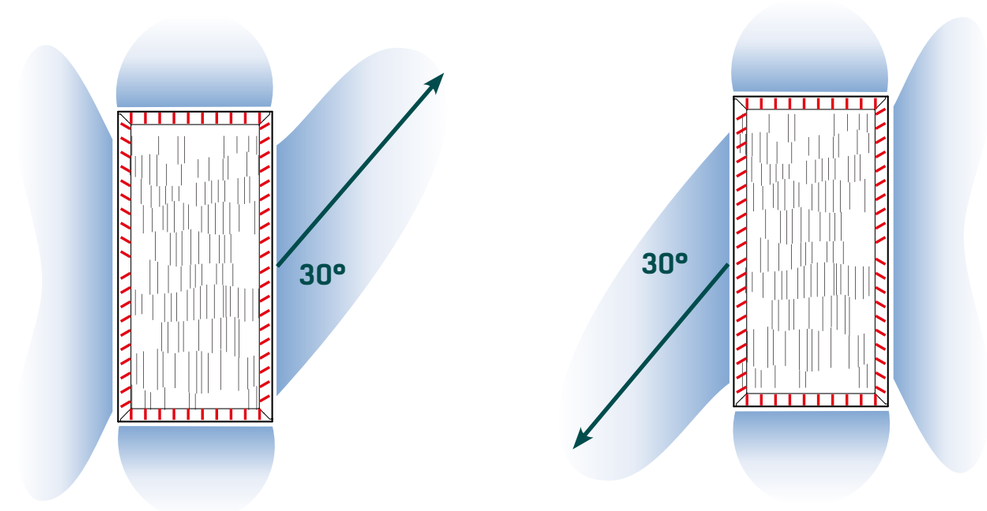

FIGURE 12. Flow pattern with air direction set at 30° in two directions.

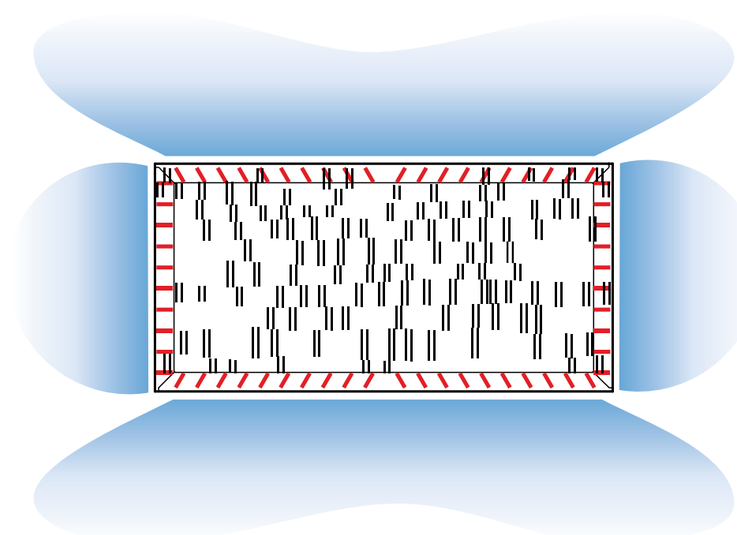

FIGURE 13. Flow pattern with air direction set with a symmetrical setting.

MAINTENANCE

1) Wipe down exterior of chilled beam with soap and water, as needed. (See **FIGURE 14**)

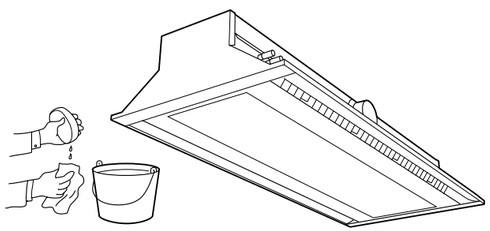

FIGURE 14

2) Swing down face plate to access the coil. (See **FIGURE 15**)

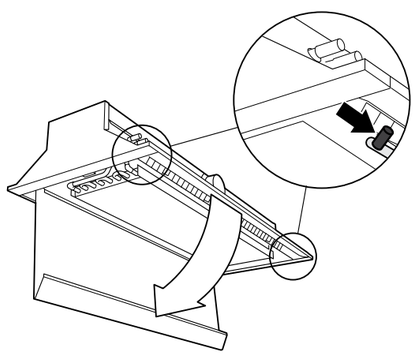

FIGURE 15

3) Vacuum the coil with a vacuum brush attachment every 5 to 10 years, or as needed. (See **FIGURE 16**)

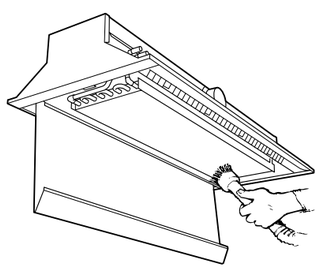

FIGURE 16

THIS PAGE WAS INTENTIONALLY LEFT BLANK

WWW.SEMCOHVAC.COM / IQHC ACTIVE CHILLED BEAM / 20233105

FläktGroup® SEMCO® delivers smart, energy-efficient, air-quality solutions to support every building application. We offer our customers innovative technologies, high-quality products and outstanding performance supported by more than fifty years of accumulated industry experience. The broadest offering on the market and a strong market presence in 65 countries worldwide guarantees that we are always by your side, ready to deliver: Excellence in Solutions.

FläktGroup® SEMCO®
Corporate Headquarters
1800 East Pointe Drive
Columbia, Missouri 65201 USA

573.443.1481

sales.semco@flaktgroup.com

To learn more about FläktGroup® SEMCO® offerings and to contact your nearest representative please visit

www.semcohvac.com

© Copyright 2023 SEMCO LLC. All Rights Reserved. SEMCO embraces a policy of continuous development and improvement, the right is reserved to supply products which may differ from those illustrated and described in this publication. Specifications are subject to change without further notice. Any FläktGroup SEMCO purchase is subject to FläktGroup SEMCO standard terms and conditions. Certified dimensions will be supplied upon request on receipt of order. SEMCO is a registered Trademark of SEMCO LLC. Other trademarks and logos in this publication may be property of SEMCO, LLC, its subsidiaries or any of its related companies and/or other organizations or individuals.