FläktGroup®
SEMCO®

LYRA II IQCC

CASSETTE CHILLED BEAM

INSTALLATION & OWNER'S MANUAL

TABLE OF CONTENTS

Introduction....1
Dimensions and Weight....1
Standard Submittal: Active Chilled Beams....1
Pre-Installation....2
Receiving and Inspection....2
System Installation....2
Airflow Connections....6
Systems Flushing....6
Air and Water Connections....7
Controls....10
Adjusting Airflow....16
LYRA II IQCC Primary Airflow (CFM) Comissioning....17
Cleaning & Maintenance....18

© SEMCO 1995-2022. All rights reserved.

The information in this owner's manual is furnished for informational use only, is subject to change without notice, and should not be construed as a commitment by SEMCO LLC. SEMCO LLC assumes no responsibility for any errors that may appear in this owner's manual.

No part of this publication may be reproduced, stored in a retrieval system or transmitted, in any form or by any means, electronic, mechanical, recording, or otherwise, without the prior written permission of SEMCO LLC.

© SEMCO LLC 2022 All Rights Reserved. SEMCO and the SEMCO logo are registered Trademarks of SEMCO LLC. All other trademarks are registered to their respective companies.

INTRODUCTION

This manual describes how to erect, store, clean and maintain FläktGroup® SEMCO® LYRA II IQCC chilled beams. Each section provides information to guide the installation and maintenance of all components. It should also be noted that a section or sections of this manual might not apply to your system.

DIMENSIONS AND WEIGHT

	VERSION LENGTH			
	LENGTH (IN)	WIDTH (IN)	DRY (LBS)	OPERATING (LBS)
LYRA II - 60 COOLING ONLY	23.75	23.75	35	37
LYRA II - 60 COOLING & HEATING	23.75	23.75	35	40
LYRA II - 120 COOLING ONLY	47.75	23.75	29	68
LYRA II - 120 COOLING & HEATING	47.75	23.75	29	71

FIGURE 1. Overall heights and weights of the LYRA II IQCC

STANDARD SUBMITTAL: ACTIVE CHILLED BEAMS

A) GENERAL:

1) Chilled beam to be an integrated system for ventilation and cooling. The beams shall consist of a steel housing encasing the integral sensible cooling coil and a plenum feeding a series of adjustable induction slots, and a face including a grille and diffusers. Chilled beam to be active with primary ventilation introduced through side duct connection. Chilled beams shall be designed to be installed within a 24" wide, tile grid hard-ceiling, or exposed. Beam to have adjustable air flow and flow pattern.

B) QUALITY ASSURANCE:

1) Hydronic cooling capacities shall be established by testing accordance with European standard EN-15116.

C) CASING:

1) Casing shall be mainly made of galvanized steel sheet.

2) Bottom plate of chilled beam shall be removable without tools for coil access.

3) Beam face shall consist of a room air induction section of 50% free area perforated steel surrounded by four linear supply slots. The entire visible face section, shall be finished in standard RAL 9003 white, 30% gloss, which corresponds to NCS 0500-N.

4) Each beam shall be provided with a pressure tap that may be used to measure the pressure differential between the primary air plenum and the room. Performance tables, which relate this pressure differential reading with the primary airflow rate, shall be provided by the beam manufacturer.

5) The overall height of the beam shall not exceed 8¾."

D) COILS:

1) Heat exchanger coil made of aluminum fins mechanically bonded to copper pipes with 0.59 inches outside diameter or ½" British standard pipe (BSPP) male threaded connections, pressure leak tested during fabrication.

2) Coils have a maximum recommended working pressure of 95 psi.

E) DUCT CONNECTION:

1) A 4.9" or 6.3" diameter primary supply air duct connection to the IQCC beam is located on the side.

F) INDUCTION SLOTS:

1) The chilled beam shall be regulated by means of variable geometry slots and beam shall provide omni-directional supply.
2) Slots will be adjustable without the need for tools or removal of the beam from its installation.
3) Each beam shall be provided with a pressure tap that may be used to measure the pressure differential reading between the primary air plenum and the room. An airflow calibration calculation which relates this pressure differential reading with the orimary airflow rate shall also be provided by the beam manufacturer.

G) FLOW PATTERN CONTROL:

1) Diffusers shall include optional, adjustable flow pattern control fins to adjust the airflow pattern at different angles: 0+15+30+45, mounted within the air outlet of the beam.
2) Flow pattern control shall be provided in sections for multi-directional airflow through the length of the beam.
3) No tools shall be required for adjustment of the flow pattern control.

H) CONTROLS:

1) Water control valves shall be provided by others.
2) Optional integrated control package includes combination temperature and CO_2 room controller. Optional condensate sensor may be added to disable cooling when dewpoint approaches chilled water temperature. Optional Pi® actuator and occupant sensor may be added for demand controlled ventilation.

PRE-INSTALLATION

Chilled beams can accumulate dust, dirt and corrosive matter (like salt) during shipment. If chilled beams appear to be dirty when received, follow the maintenance instructions on **PAGE 6** to clean soon after arrival. Abrasives and solvents should not be used without first consulting FläktGroup SEMCO.

RECEIVING AND INSPECTION

Upon delivery, confirm that the quantity and model(s) received matches the bill of lading. If there is any discrepancy, immediately notify FläktGroup® SEMCO®.

Inspect the packages for signs of damage. If damage is suspected, contact FläktGroup® SEMCO® immediately. If no visible damage is apparent, the beam should be properly stored until installation.

If the chilled beams must be stored before installation, store indoors on a hard, dry surface and protected from damage and moisture.

SYSTEM INSTALLATION

SUPPORT:

1) Chilled beams shall be independently suspended from the structure above by four (4) threaded rods of 3/8" diameter or optional cable suspension. (See **FIGURE 2**) The upper end of the rods shall be suspended from unistrut channels that are:

   a. Mounted perpendicular to the beam length

   b. At least four inches wider than the beam

IQCC-aaa-bb-c-dd-0

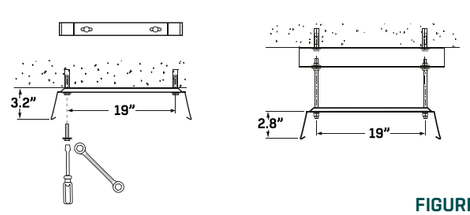

FIGURE 2

2) Brackets shall be provided for rod installation

   (See **FIGURE 3**). These brackets will have a snap type connection with the beam that will allow for the beam to be repositioned along the length of the beam. The brackets will have oval mounting holes which will allow for the beam to have fine adjustment perpendicular to the length beam while the unistrut will have gross adjustment along the same adjustment path.

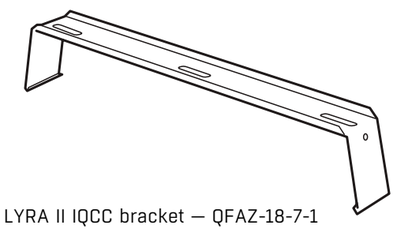

FIGURE 3. LYRA II IQCC bracket — QFAZ-18-7-1

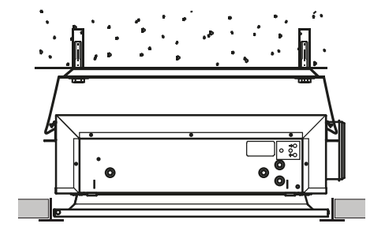

FIGURE 4. LYRA II IQCC hanging option tight to the structure using bracket — QFAZ-18-7-1.

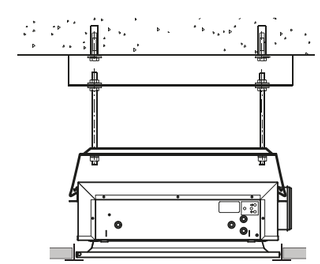

FIGURE 5. LYRA II IQCC hanging option using bracket — QFAZ-18-7-1 and suspension rods — QFAZ-12.

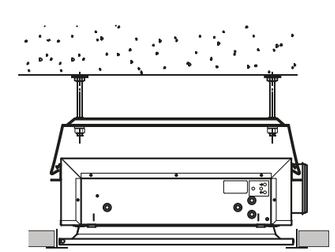

FIGURE 6. LYRA II IQCC hanging option using bracket — QFAZ-18-7-1 and threaded anchors (by others).

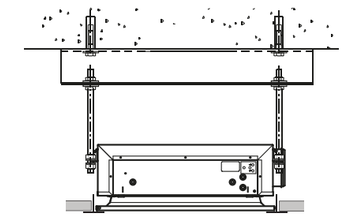

FIGURE 7. LYRA II IQCC hanging option without snap-pit bracket with suspended rods — QFAZ-12.

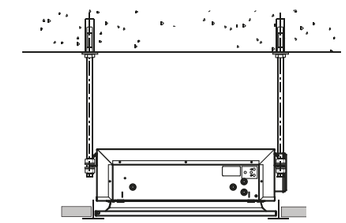

FIGURE 8. LYRA II IQCC hanging option without snap-pit bracket with threaded anchors (by others).

3) The beam is then to be positioned within the acoustical ceiling grid and leveled horizontally by adjusting the nuts connecting and threaded rods to the beam.

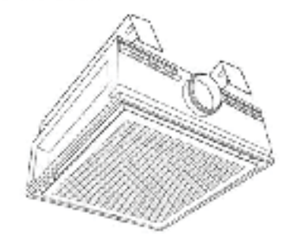

FIGURE 9.

CABLE SUSPENSION (OPTIONAL):

1) In lieu of a fastening bracket, the LYRA II IQCC may be installed into a concrete or metal ceiling, with a cable suspension system. When using a cable suspension system, the first step is to thread the wire through the unistrut that will be anchored to the ceiling. (See **FIGURE 10**).

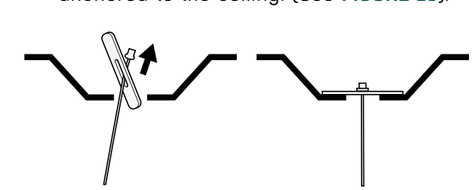

FIGURE 10. Cable suspension from metal decking (by others).

2) When cable hanging hardware cannot be above the structure, spring clip systems (by others) may be used. (See **FIGURE 11**).

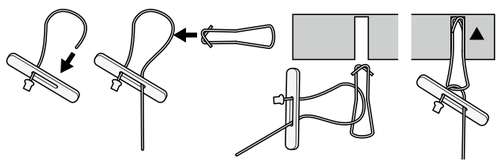

FIGURE 11. Cable suspension from spring clips (by others).

3) Next, thread the cable up through the cable hanger and loop the cable around the unistrut. (See **FIGURES 12-14**).

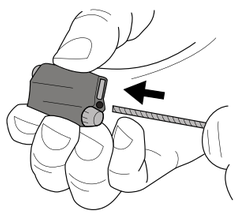

FIGURE 12

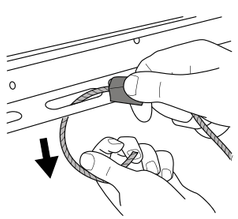

FIGURE 13

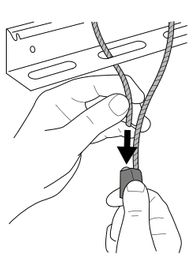

FIGURE 14

4) Once the cable is looped around the unistrut, thread the remaining cable side through the other side of the cable hanger and pull through. (See **FIGURE 15**)

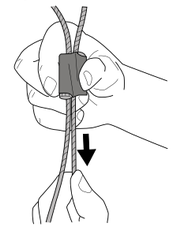

FIGURE 15

5) Once the cable is threaded through the cable hanger, secure the cable by pressing the buttons found at the top and bottom on the left side of the cable hanger. (See **FIGURE 16** and **17**)

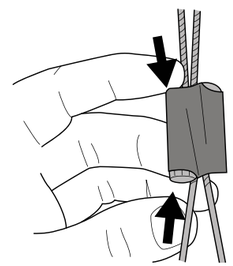

FIGURE 16

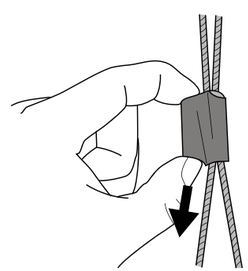

FIGURE 17

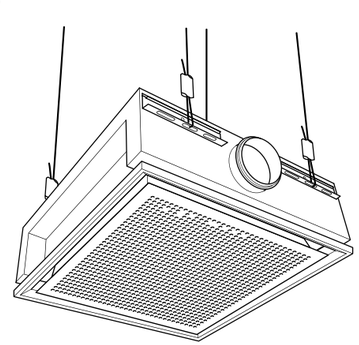

FIGURE 18.

FREELY SUSPENDED INSTALLATION:

1) When installing a freely suspended LYRA II IQCC, a special casing with a front plate adapter must be applied to the beam. Before installing the face plate adapter, fully remove the face plate of the LYRA II IQCC.

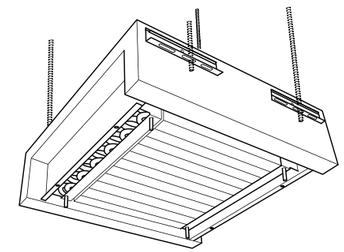

FIGURE 19. LYRA II IQCC with the face plate removed.

2) Fit the additional casing over the edges of the LYRA II IQCC and screw (4 screws) into place. See **FIGURES 20** and **21**.

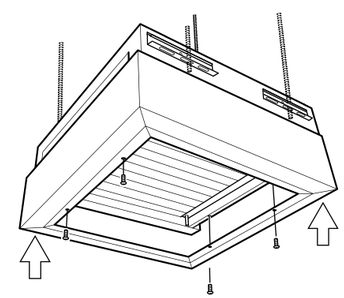

FIGURE 20. Screw placement for additional casing

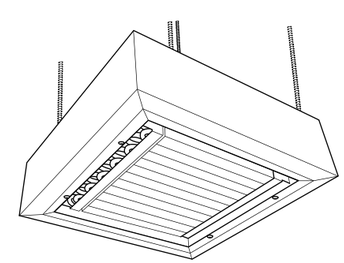

FIGURE 21. LYRA II IQCC with additional casing installed

3) Reattach the faceplate to the LYRA II IQCC and screw back into place. See **FIGURE 22**.

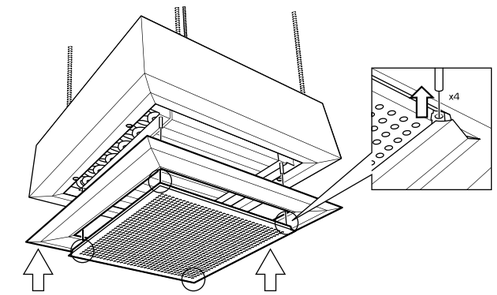

4) Adjust the faceplate to suit airflow needs. See **FIGURE 23**.

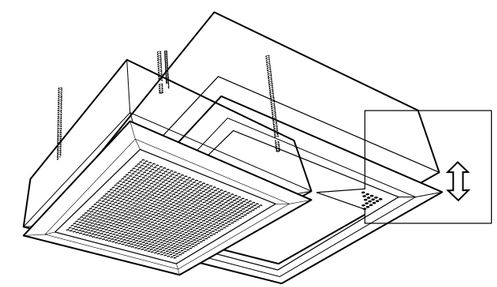

AIRFLOW CONNECTIONS

1) Before connecting the LYRA II IQCC to a duct system, make sure to remove the dust cap and the protective film covering the front panel. (See **FIGURE 18**)

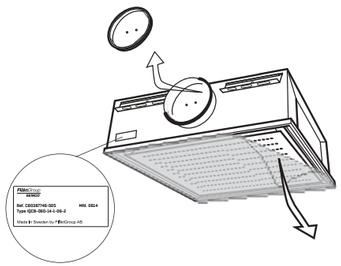

FIGURE 18

2) Connect the LYRA II IQCC to a duct system, using the configurations below. (See **FIGURES 19-21**)

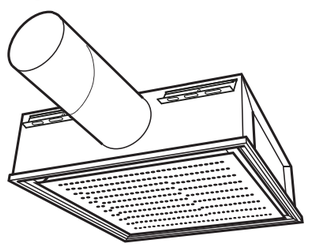

FIGURE 19

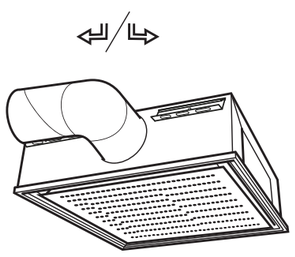

FIGURE 20

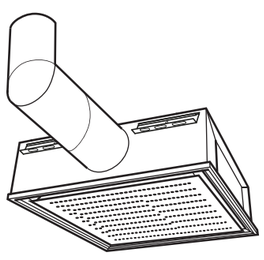

FIGURE 21

SYSTEMS FLUSHING

Before connecting the water supply water system(s) to the beams, contractor shall flush the piping system to assure that all debris and other matter have been removed. (See **PAGES 7-9** for water connection locations).

AIR AND WATER CONNECTIONS

LYRA II IQCC-060 (e=0)

IQCC-060-bb-c-dd-4

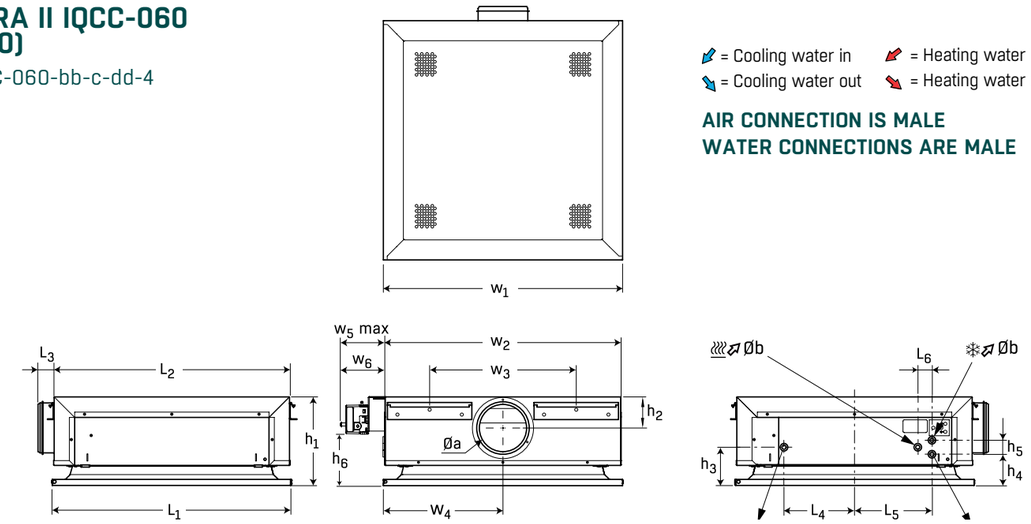

Øa	Øb	h1	h2	h3	h4	h5	h6	L1	L2	L3	L4	L5	L6	w1	w2	w3	w4	w5	w6
4.9"	0.6"	8.7"	3.0"	3.7"	3.1"	1.4"	5.1"	23.4"	23.0"	1.6"	6.7"	7.7"	1.4"	23.4"	23.1"	14.3"	11.7"	5.5"	3.7"

LYRA II IQCC-060 (e=0)

IQCC-060-bb-c-dd-1

IQAZ-33-060-c-ddd

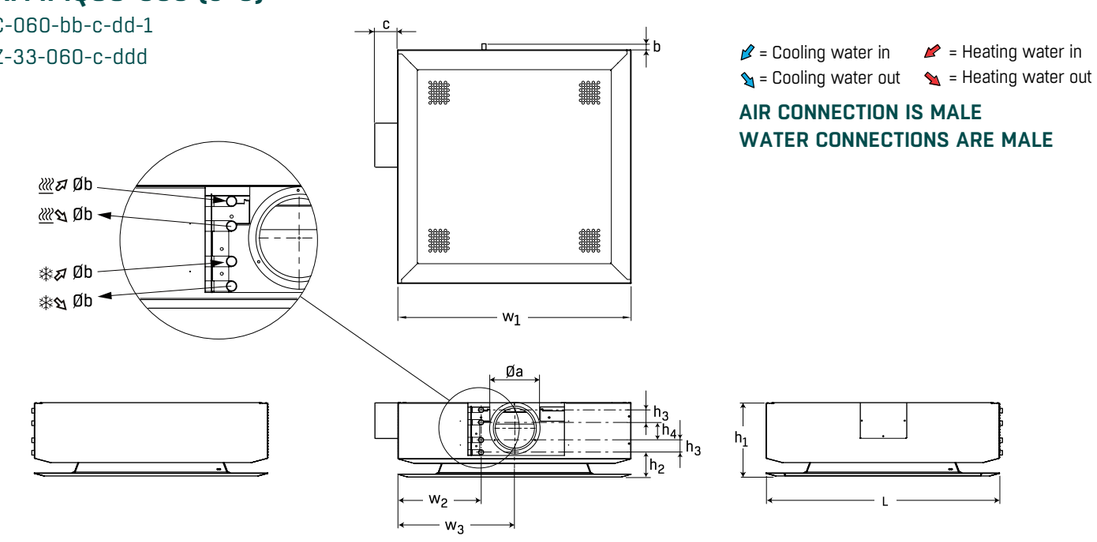

Øa	Øb	b	c	h1	h2	h3	h4	L	w1	w2	w3
4.9"	0.6"	0.8"	3.1"	8.7"	3.1"	1.4"	2.1"	28.5"	28.5"	10.2"	14.3"

LYRA II IQCC-120 (e=0)

IQCC-120-bb-c-dd-4

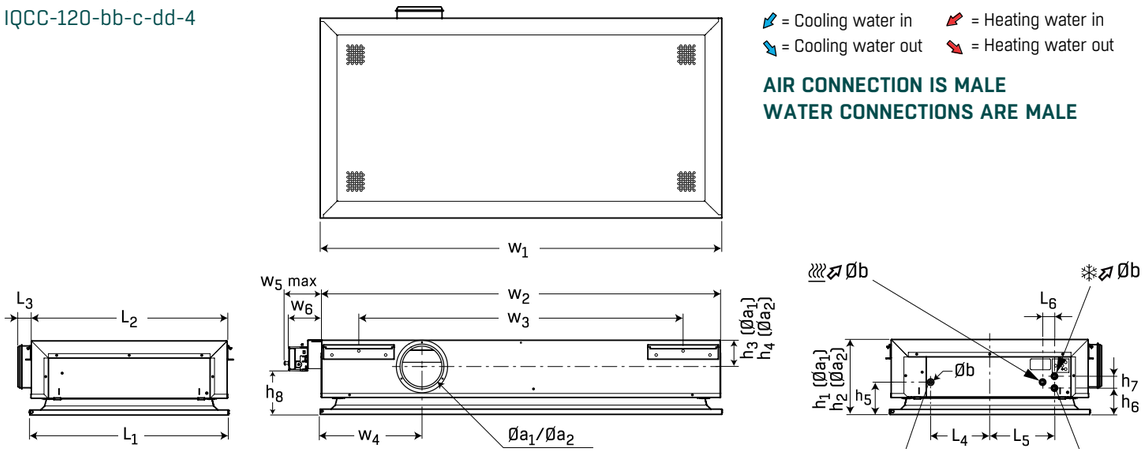

Øa	Øa2	Øb	h1	h2	h3	h4	h5	h6	h7	L1	L2	L3	L4	L5	L6	w1	w2	w3	w4	w5	w6
4.9"	6.3"	0.6"	8.7"	10.3"	3.0"	3.8"	3.7"	3.1"	1.4"	23.4"	23.0"	1.6"	6.9"	7.7"	1.4"	47.0"	46.7"	40.1"	11.7"	5.5"	3.7"

LYRA II IQCC-120 (e=1)

IQCC-120-bb-c-dd-1

IQAZ-33-120-c-ddd

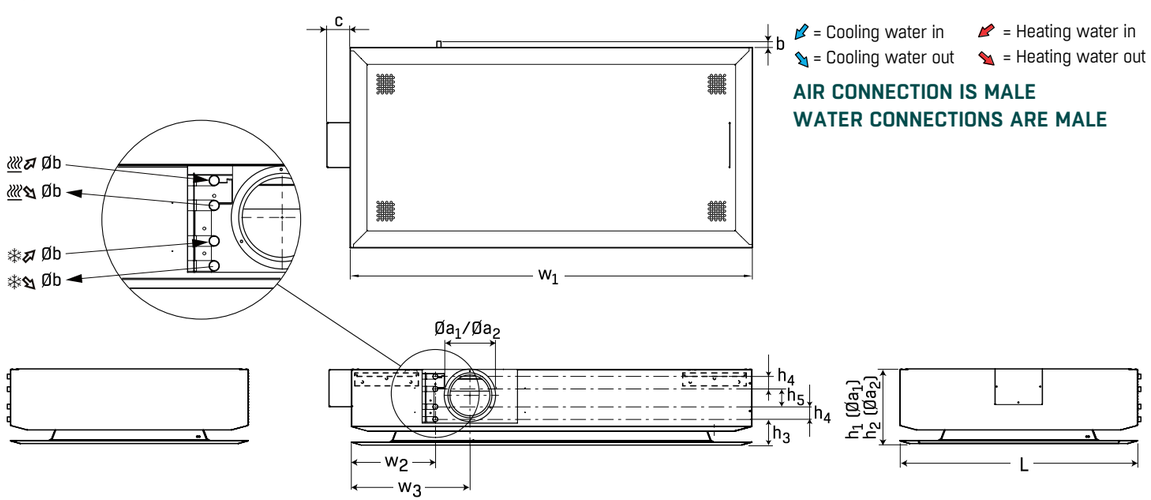

Øa	Øa2	Øb	b	c	h1	h2	h3	h4	h5	L	w1	w2	w3
4.9"	6.3"	0.8"	0.6"	3.1"	8.7"	10.0"	3.1"	1.4"	2.1"	28.5"	52.2"	10.2"	14.3"

IQAZ-33

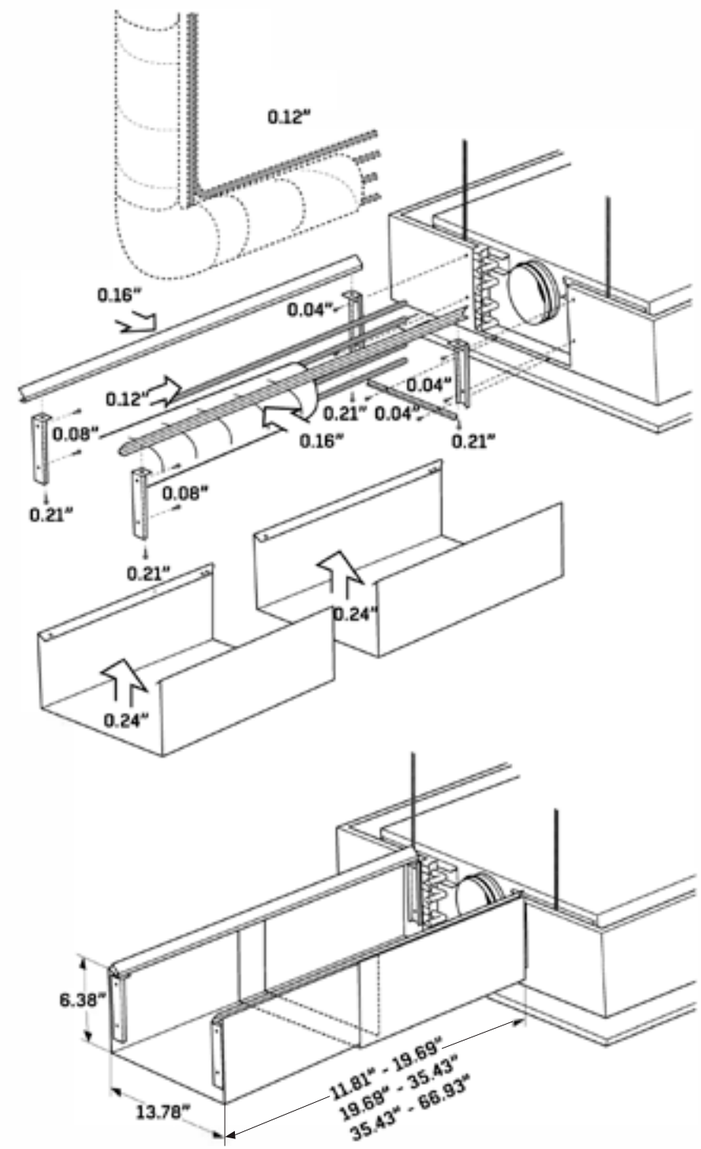

CONTROLS

PI® ACTUATOR

309VM-024-150-MB-003
150 N
3 W (1 W), • 5 VA
0.5 mm/min • 1.4 mm
0.02 PSI • max 33.5 ft. H_2O

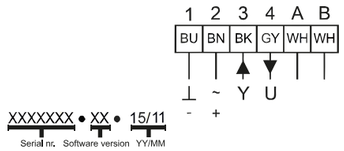

1	2	3	4	a	b
24 VAC ( )⊥ 24 VDC (-)	24 VAC (-) 24 VDC (+)	0....10V	0....10V	MODBUS	
OPERATING VOLTAGE		CONTROL SIGNAL (Y)	FEEDBACK SIGNAL (U)		
BLUE (BU)	BROWN (BN)	BLACK (BK)	GRAY (GY)		

FIGURE 22. Wiring Diagram

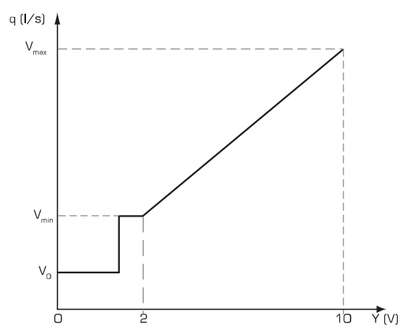

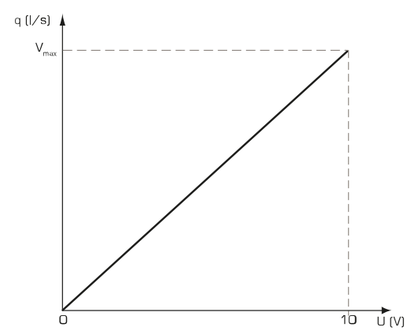

$$q_{act} = V_{min} + \frac{Y - 2}{8} \times (V_{max} - V_{min})$$

(l/s) (l/s) (l/s)

U = 0 - 10 (0 V = 0 l/s, 10 V = V_{max})
(VDC)

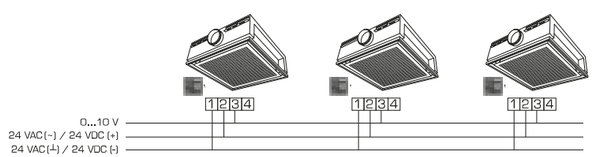

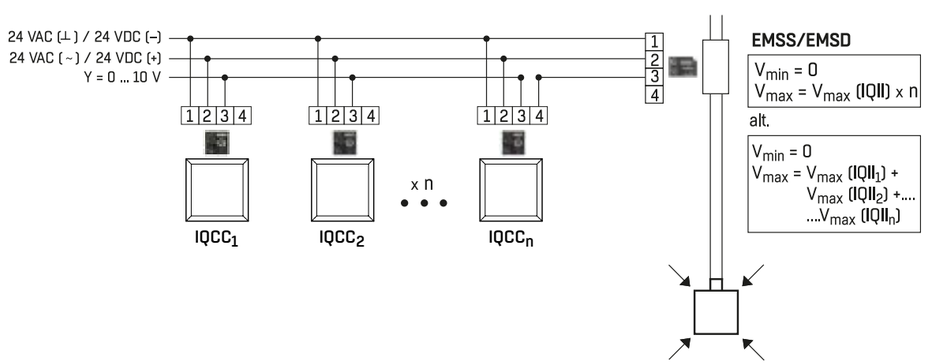

$K_{100\%}$

CHILLED BEAM CASSETTE	$K_{100\%}$
IQCC-060-bb-c01/02-e	3.35
IQCC-060-bb-c03/04-e	5.70
IQCC-120-bb-c01/02-e	5.85
IQCC-120-bb-c03/04-e	9.40
IQCC-120-bb-c05/06-e	9.60

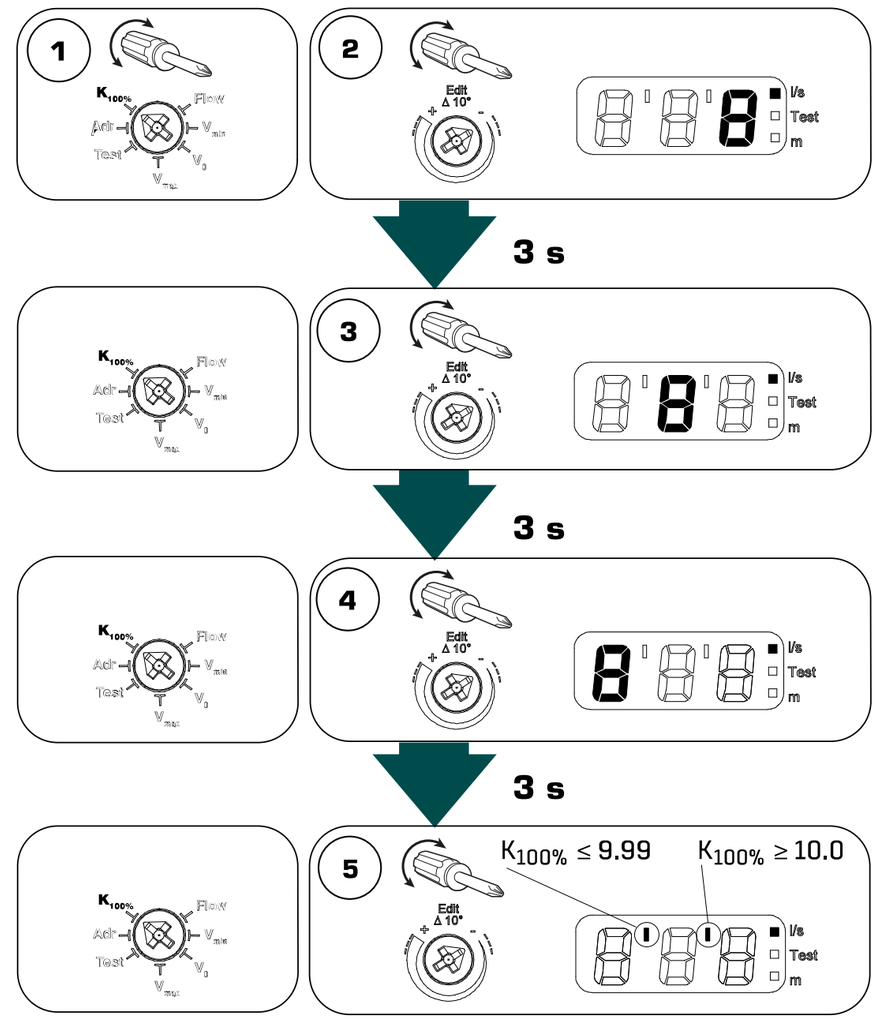

V_0, V_{MAX} AND V_{MIN}

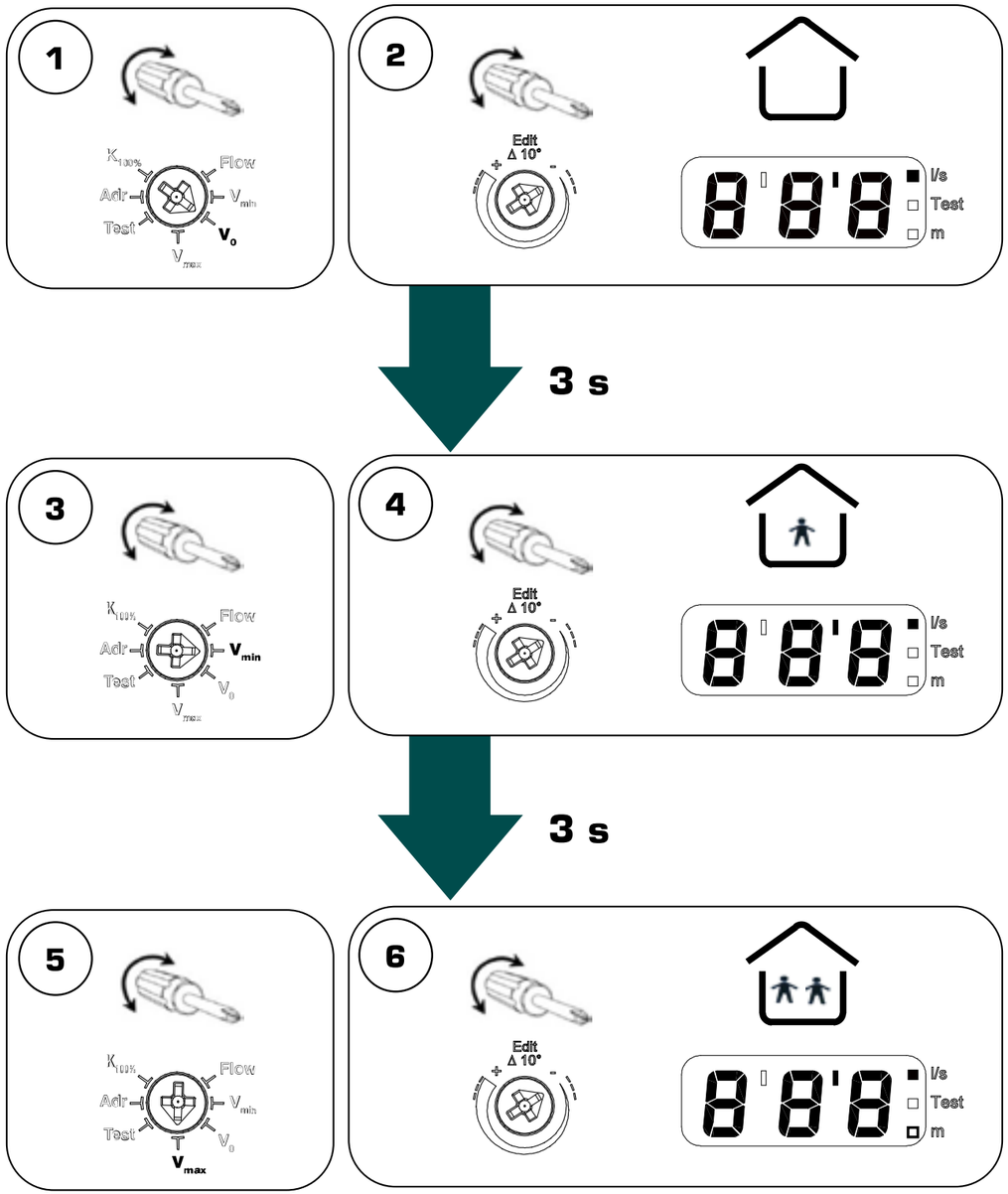

LEADER BEAM - STRZ-76 ROOM CONTROLLER

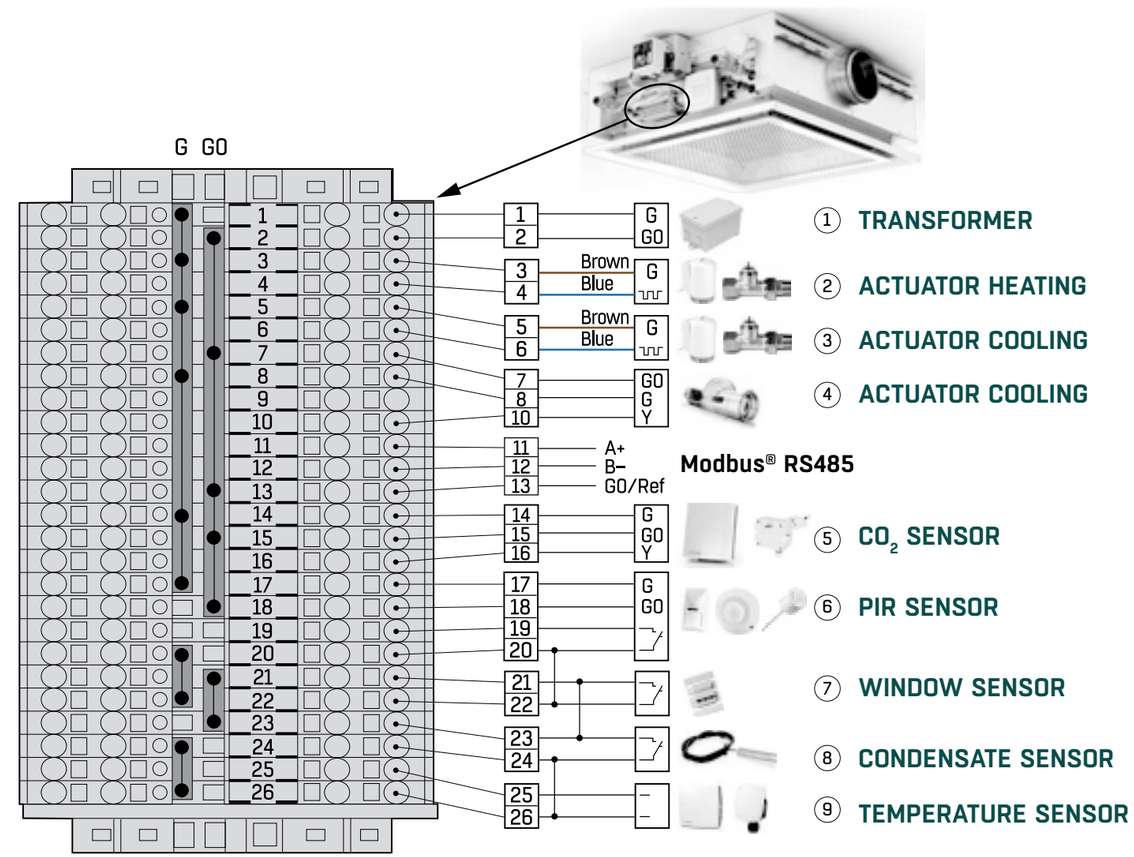

FOLLOWER BEAM - STRZ-76 ROOM CONTROLLER

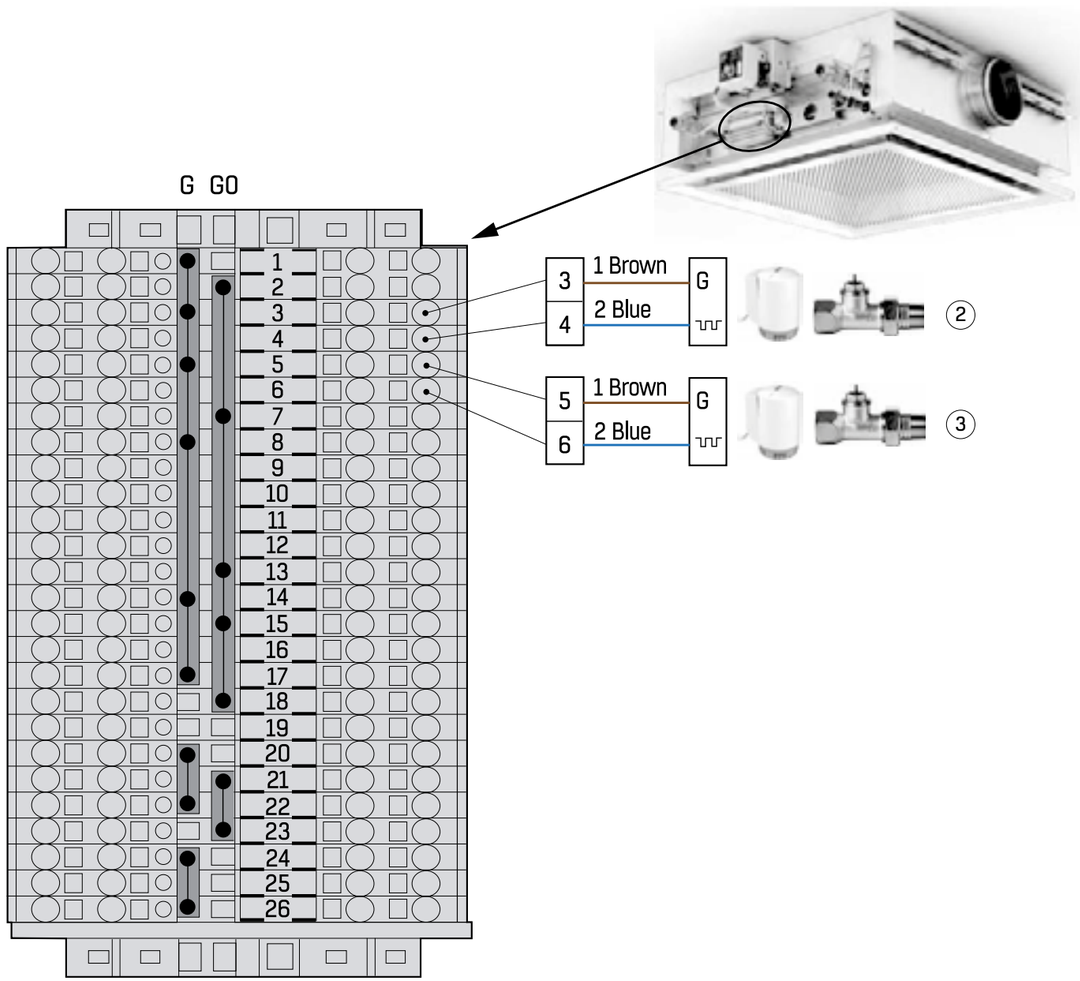

FOLLOWER → FOLLOWER BEAM
LEADER → LEADER BEAM

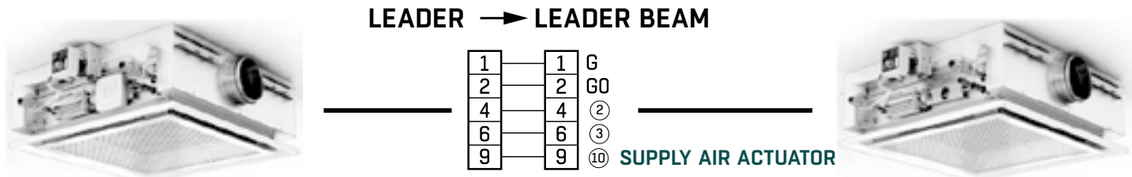

STRZ-76 ROOM CONTROLLER

STRA - CONTROL UNIT

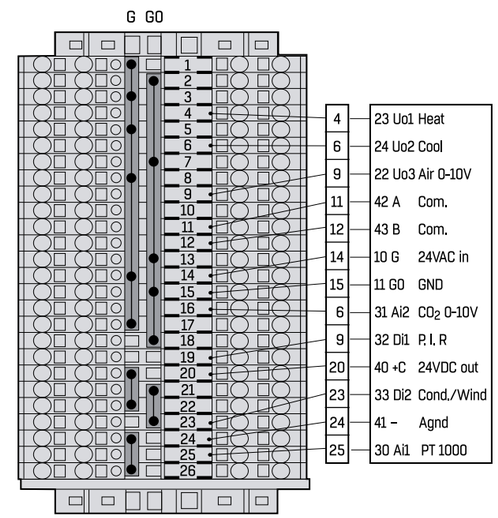

Pi® ACTUATOR

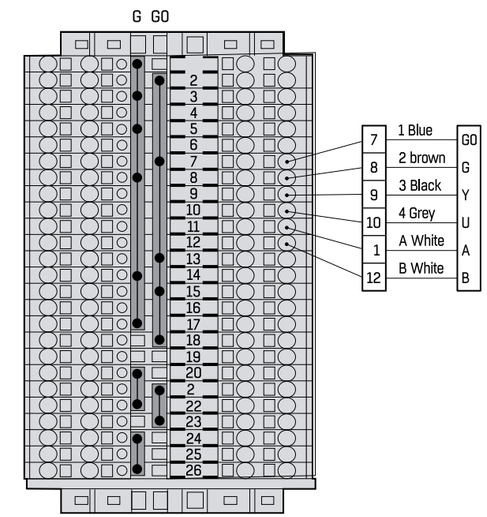

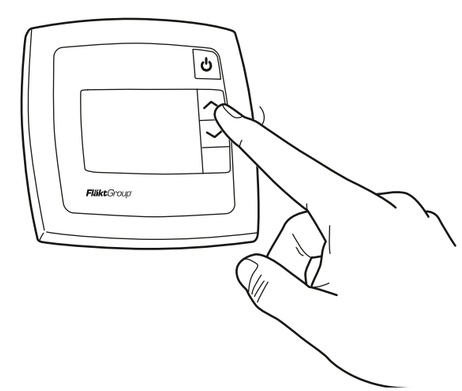

STRZ-76-02-cc-d-ee	Parameter 15 = 1
STRZ-76-bb-02/04/06/08-d-ee	Parameter 18 = 2
STRZ-76-bb-03/04/07/08	Parameter 45 = 1, Parameter 17 = 3

ADJUSTING AIRFLOW

1) Air flow patterns can easily be adjusted at any time to suit a zone's changing needs. To adjust the airflow pattern on the LYRA II IQCC, lower the front plate and adjust the blades on the inside edges of the front plate. (See **FIGURE 22**)

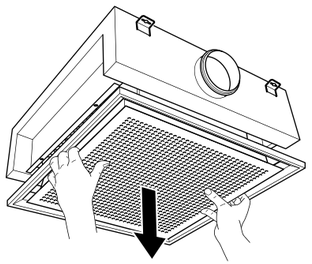

FIGURE 22

2) Once the blades are adjusted to suit the zone's needs, the airflow slots in the beam, must be adjusted to design primary airflow. This can be done with a screwdriver (See **FIGURE 23**).

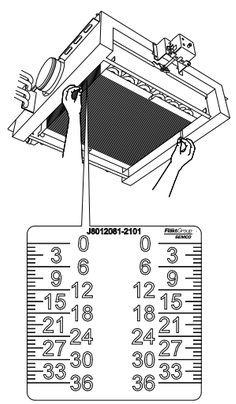

FIGURE 23

3) Air pressure must be checked at this time. (See **FIGURE 24**).

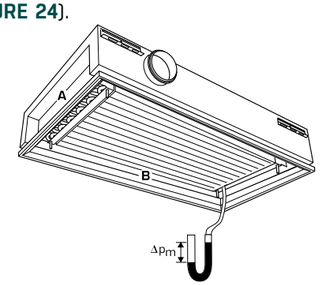

FIGURE 24

4) Once everything is adjusted, push the front plate back up into place. (See **FIGURE 25**).

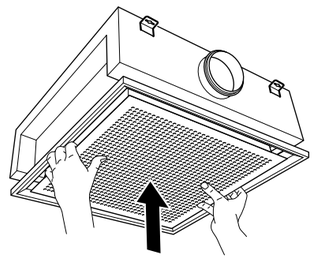

FIGURE 25

COANDA SAFETY CONTROL

The height of the front plate may be adjusted to maintain throw at all airflows. (See **FIGURES 26** and **27**).

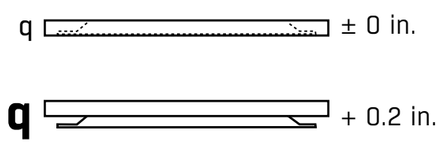

FIGURE 26. An example of a LYRA II IQCC height adjustment needed for maintaining the Coanda effect.

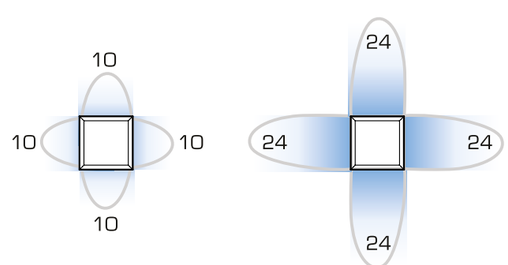

FIGURE 27. An example of airflow patterns using the LYRA II IQCC Coanda safety control.

LYRA II IQCC PRIMARY AIRFLOW (CFM) COMISSIONING

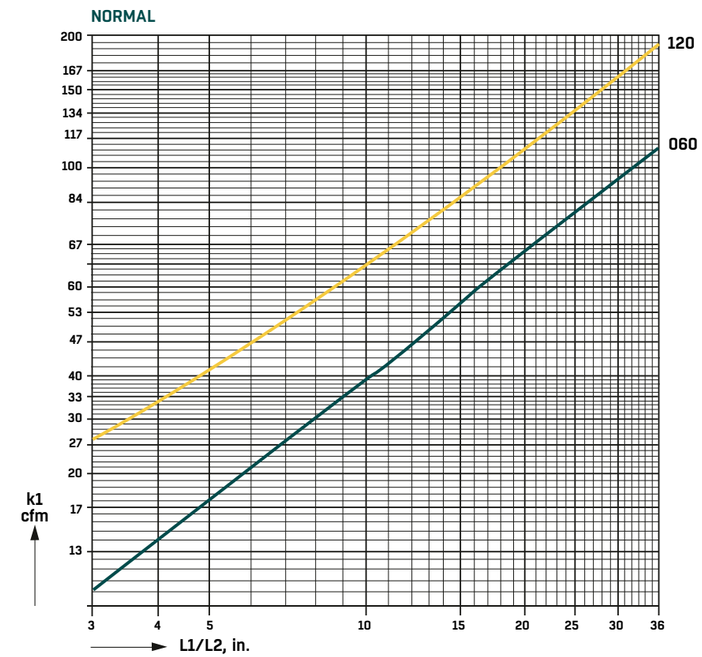

$$q(cfm) = k\sqrt{\Delta p\ (in.\ w.c.)}$$

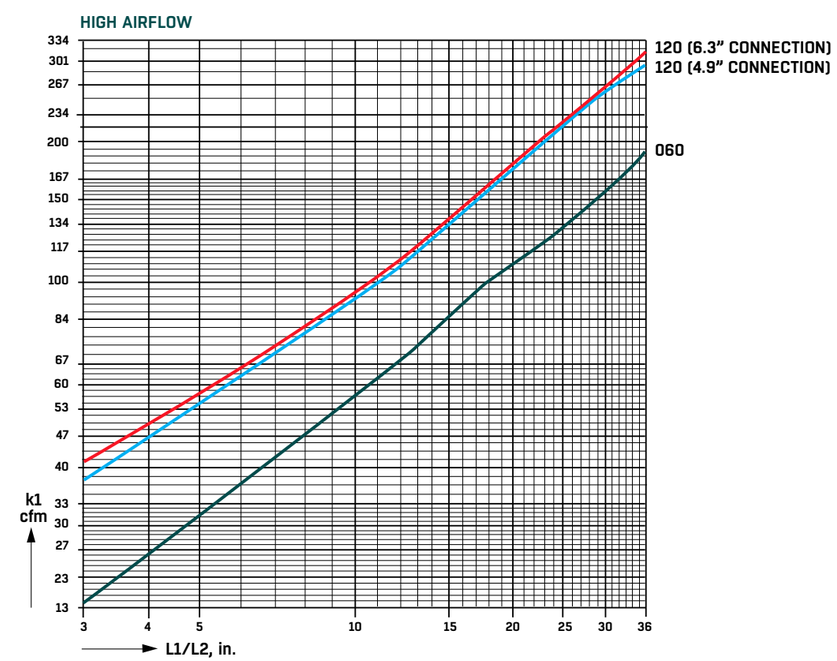

CLEANING & MAINTENANCE

1) Wipe down the exterior of the chilled beam with soap and water as needed. (See **FIGURE 28**)

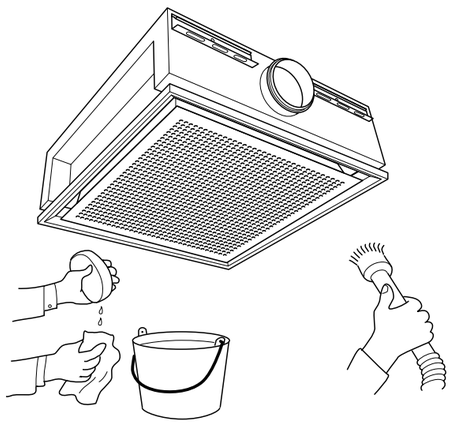

FIGURE 28

2) Lower and remove the front plate to access the coil. (See **FIGURE 29**)

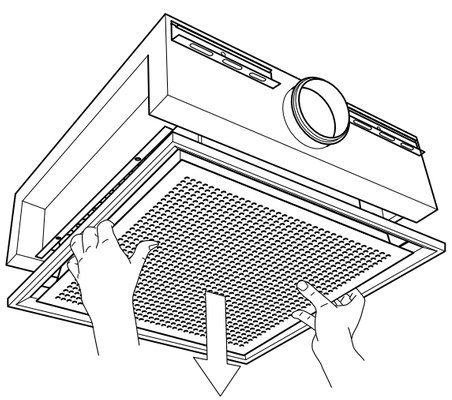

FIGURE 29

3) Vacuum the coil with a vacuum brush attachment every 5-10 years, or as needed. (See **FIGURE 30**)

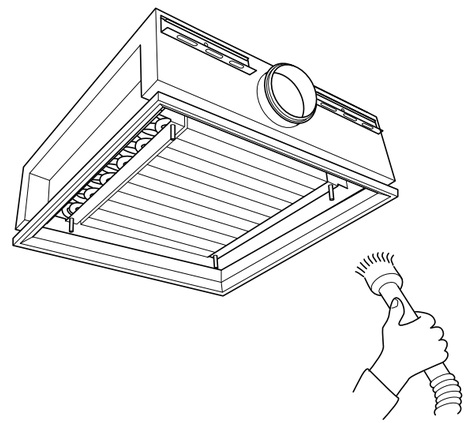

FIGURE 30

4) Once vacuuming and cleaning are complete, snap the front panel back into place. (See **FIGURE 31**)

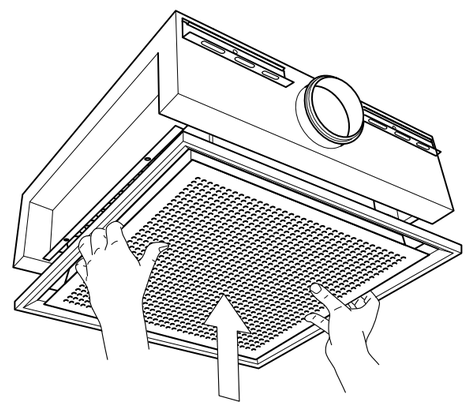

FIGURE 31

THIS PAGE WAS INTENTIONALLY LEFT BLANK

THIS PAGE WAS INTENTIONALLY LEFT BLANK

THIS PAGE WAS INTENTIONALLY LEFT BLANK

FläktGroup® SEMCO® delivers smart, energy-efficient, air-quality solutions to support every building application. We offer our customers innovative technologies, high-quality products and outstanding performance supported by more than fifty years of accumulated industry experience. The broadest offering on the market and a strong market presence in 65 countries worldwide guarantees that we are always by your side, ready to deliver: Excellence in Solutions.

FläktGroup® SEMCO®

Corporate Headquarters
1800 East Pointe Drive
Columbia, Missouri 65201 USA

573.443.1481

sales.semco@flaktgroup.com

To learn more about FläktGroup® SEMCO® offerings and to contact your nearest representative please visit

www.semcohvac.com

© Copyright 2022 SEMCO LLC. All Rights Reserved. SEMCO embraces a policy of continuous development and improvement, the right is reserved to supply products which may differ from those illustrated and described in this publication. Certified dimensions will be supplied upon request on receipt of order. Any FläktGroup SEMCO purchase is subject to FläktGroup SEMCO standard terms and conditions. SEMCO is a registered Trademarks of SEMCO LLC. Other trademarks and logos in this publication may be property of SEMCO, LLC, its subsidiaries or any of its related companies and/or other organizations or individuals.