FläktGroup®

SEMCO®

LYRA II IQCC

CASSETTE CHILLED BEAM

TECHNICAL GUIDE

TABLE OF CONTENTS

The LYRA II IQCC....1
Key Features....1
Options....1
Quick Selection....1
LYRA II IQCC Dimensions and Weights....1
Specifications....2
Flow Pattern Control....3
Energy Control....3
Airflow Connections....4
Coanda Safety Control....4
Pressure Independent Actuator®....5
Drywall Flange Kits....6
Technical and Sound Data....7
Technical Cooling and Heating Data....8
Dimensions and Weights....9
Cable Suspension....11
Accessories....12
Product and Accessory Codes....14

© SEMCO LLC 1996-2022. All rights reserved.

The information in this technical guide is furnished for informational use only, is subject to change without notice, and should not be construed as a commitment by SEMCO. SEMCO assumes no responsibility for any errors that may appear in this technical guide.

No part of this publication may be reproduced, stored in a retrieval system or transmitted, in any form or by any means, electronic, mechanical, recording, or otherwise, without the prior written permission of SEMCO.

SEMCO is a registered trademark of FläktGroup Semco LLC. All other trademarks referenced herein are the properties of their respective owners.

THE LYRA II IQCC

The LYRA II IQCC cassette, four-way throw chilled beam, is one of The FläktGroup® SEMCO® LYRA II IQCC compact cassette chilled beam combines high cooling capacity with a high level of comfort. LYRA II IQCC is capable of diffusing air in up to four directions. By mixing ventilation air with ambient air, the LYRA II IQCC can efficiently cool or heat a zone, based on the current conditions. The LYRA II IQCC can quickly adapt to frequently changing conditions, with easily adjustable nozzles and diffusers with flow pattern control.

If the Coanda effect is a concern, an optional Coanda safety control function is available. The Coanda safety control keeps the air trapped by the Coanda effect, stationary, while also delivering the highest possible cooling to a space. The perforated panel on the LYRA II IQCC can easily be maneuvered up and down to balance the airflow and pressure needed to maintain the Coanda effect. .

Virtually undetectable, the LYRA II IQCC is one of the quietest chilled beams on the market. It operates at less than 20 dB for a single cassette installation and less than 25 dB for a three cassette installation.

KEY FEATURES

- Lengths: 24" x 24" and 24" x 48"
- Ventilation
- Compact chilled beam
- Adjustable induction — energy control
- Adjustable air diffusion — flow pattern control
- Easy installation — fastening brackets
- Can be recessed or exposed
- Heating and cooling
- Coanda safety control
- Easy to clean and maintain
- Energy efficient, saving money on operating and life-cyle costs
- Integrated control for plug and play installation

OPTIONS

- Pressure independent (Pi®) actuator
- Demand control ventilation with PI® actuator
- Retrofit options are available with the Pi® actuator

QUICK SELECTION

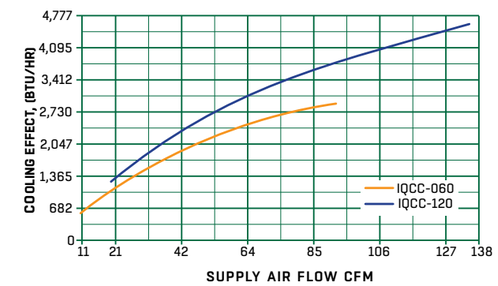

The diagram shows the approximate cooling power P_{tot} in BTU/Hr with water flow q_w = 0.05 CFM, temperature difference between room air and supply air Δt = 14.4° F. Temperature difference between mean water temperature and room temperature, Δ = 14.4°F. Total air pressure drop 0.28 in w.c..

LYRA II IQCC DIMENSIONS AND WEIGHTS

	VERSION LENGTH			
	LENGTH (IN)	WIDTH (IN)	DRY (LBS)	OPERATING (LBS)
LYRA II - 60 COOLING ONLY	23.75	23.75	35	37
LYRA II - 60 COOLING & HEATING	23.75	23.75	35	40
LYRA II - 120 COOLING ONLY	47.75	23.75	29	68
LYRA II - 120 COOLING & HEATING	47.75	23.75	29	71

FIGURE 1. LYRA II IQCC dimensions and weight

SPECIFICATIONS

GENERAL

Chilled beam to be an integrated system for ventilation and cooling and, optionally, heating. The beams shall consist of a steel housing encasing the integral water coil(s), a plenum feeding a series of adjustable induction slots, and a face including a grille and diffusers. Chilled beam to be active with primary ventilation introduced through the end connection. End duct connection shall be located at the same end of the beam as the coil connections. Chilled beam shall be designed to be installed within a 24” wide ceiling tile grid. Beam to have adjustable air flow, cooling effect, and flow pattern.

QUALITY ASSURANCE

Hydronic cooling capacities shall be established by testing accordance with European standard EN-15116.

CASING

Casing shall be mainly made of galvanized steel sheet. The front plate is powder coated standard RAL 9003 white, 30% gloss, which corresponds to NCS 0500-N.

Bottom plate of chilled beam shall be removable without tools for coil access.

Beam face shall consist of a room air induction section of perforated steel with 50+% free area perforation pattern flanked by four linear supply slots. The entire visible face section shall be finished in RAL 9003, white powder coat paint.

The overall height of the beam shall not exceed 8¾ inches.

COILS

Heat exchanger coil made of aluminum fins mechanically bonded to copper pipes with 0.59 inches outside diameter or ½" British standard pipe (BSPP) male threaded connections, pressure leak tested during fabrication, 95 psi maximum recommended working pressure.

DUCT CONNECTION

A 4.9" or 6.3" diameter primary supply air duct connection to the IQCC beam is located on the side.

INDUCTION SLOTS

The chilled beam shall be complete with velocity control and be regulated by means of variable geometry slots and shall provide either uni- or bi-4-way directional supply.

Slots will be adjustable without the need for tools or removal of the beam from its installation.

Air measurement tubes shall be included, along with rated nameplate calculations for test and balance of primary airflow after installation.

DIFFUSERS

Diffusers shall provide the possibility to adjust the airflow pattern at different angles 0+15+30+45 mounted within the air-outlet of the beam.

No tools shall be required for adjustment of the diffusers.

CONTROLS

Water control valves shall be provided by others.

Optional integrated control package includes combination temperature and CO_2 room controller. Optional condensate sensor may be added to disable cooling when dewpoint approaches chilled water temperature. Optional Pi actuator and occupant sensor may be added for demand controlled ventilation.

INSTALLATION

Chilled beams shall be supported by adjustable hanging brackets supported from threaded rod or by cable hanging systems.

All specifications are subject to alteration without further notice.

FLOW PATTERN CONTROL

Flow pattern control (FPC) allows the LYRA II IQCC to be highly flexible. Flow pattern control is the configuration of plastic blades located inside the diffusion system. The configuration of blades determines how far and in what direction the air throw will go. The configurations can be set without tools and should be set to optimize air diffusion.

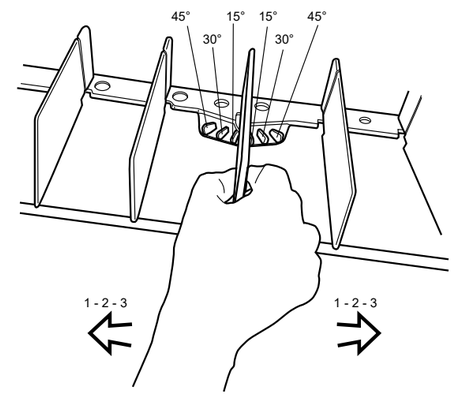

FIGURE 2. The LYRA II IQCC air deflector allows the plastic blades to be easily adjusted to change air direction

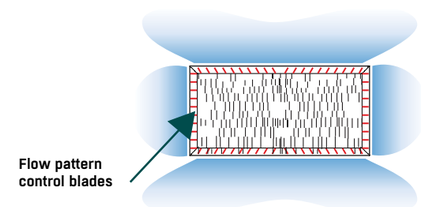

FIGURE 3. For normal airflow applications, air direction is set to 30° in two directions with flow pattern control blades, on each side. This option provides an efficient and comfortable airflow throughout the zones.

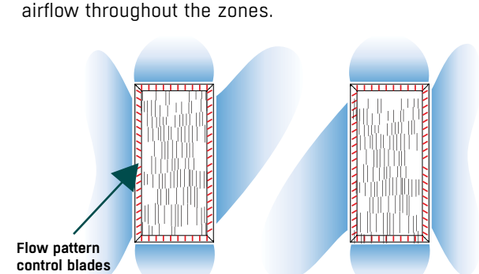

FIGURE 4. For high airflow applications, as illustrated above, a symmetrical flow can be set at opposing 30° angles, to avoid colliding airstreams with other beams in the zone, by changing the direction of the control blades, as illustrated in red on the **FIGURES 3** and **4**.

ENERGY CONTROL

Mounted on the rail of the LYRA II IQCC, the patented energy control feature, can adjust the variable nozzle settings on the LYRA II IQCC. Energy control creates a symmetrical flow of air leaving the beam. The energy control feature is automatically aligned with indicators located on the side of the beam, providing a wide range of airflow setting options for immediate and future requirements. Nozzle adjustment requires only a screwdriver to push the rails to the desired position.

AIRFLOW CONNECTIONS

The LYRA II IQCC chilled beam offers two types of connection alternatives, a single air connection, located to the right of the water connection (See **FIGURE 5** below), and a double air connection, on each long side. Equipped with a removable lid, the LYRA II IQCC allows you the option to choose which air spigot to use and which to cover on site during installation. (See **FIGURE 6** below).

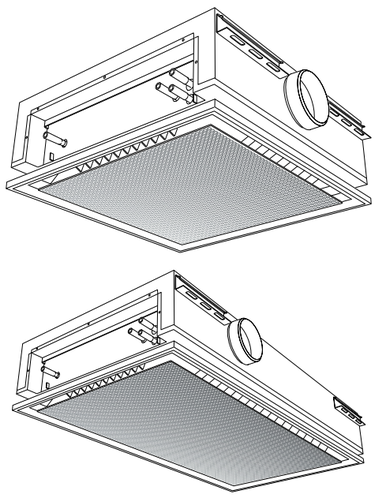

FIGURE 5. Single air connection LYRA II

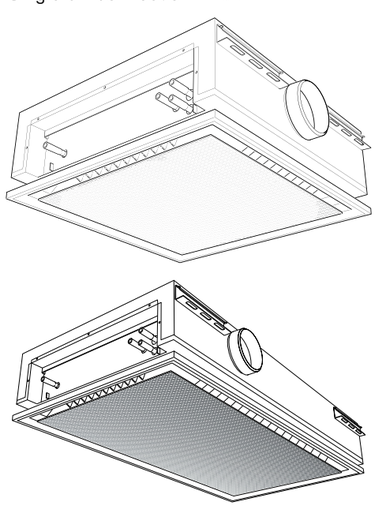

FIGURE 6. Double air connection LYRA II

COANDA SAFETY CONTROL

The Coanda safety control is a function that maintains the Coanda effect (adhesion to the air to the ceiling), while simutaneously ensuring the highest possible cooling power. This is done by pulling or pushing the front panel until it snaps into position.

At low air flows and pressures, it may be necessary to adjust the front panel to its highest position to keep the Coanda effect.

At high air flows and pressure, the Coanda effect is easily maintained, so the front panel can be set at the lowest possible condition, increasing the cooling and heating power by approximately 5-10%.

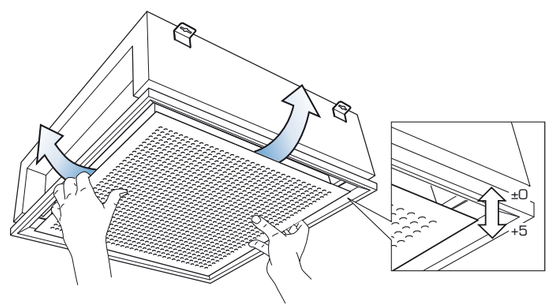

PRESSURE INDENDENT ACTUATOR® (OPTIONAL)

The Pi® actuator is an optional flow control device, that can be mounted directly to the LYRA II IQCC allowing ventilation flow to adjust in response to changes in demand or upstream pressure. Attaching a Pi® actuator to a chilled beam, allows the chilled beam to be even more flexible in terms of its ability to quickly adapt to changing space conditions. The Pi® actuator adjusts the nozzles to allow only the amount of ventilation flow needed for current occupancy levels, regardless of the pressure changes occurring in the ductwork system. Air quality can also be controlled, when a CO_2 sensor is connected to the controller. Unlike competitors' pressure independent controls, which can only be used with larger static pressure regain duct systems, the Pi® actuator can be used with any duct system. Making it easy for engineers to incorporate the LYRA II IQCC with Pi® into their designs. The Pi® actuator can be quickly removed and installed on another beam, making it incredibly versatile. In cases of redesigns or remodels, the Pi® actuator may be retrofitted to meet updated needs.

The demand control ventilation feature of the Pi® actuator allows chilled beams to be even more energy efficient due to its three modes: unoccupied, standard occupancy and high occupancy. These modes determine exactly how much air is needed in a given zone and only turn the air nozzles on if the zone's occupancy demands it. Unoccupied mode, provides a minimum primary air flow for the induction required to allow the beam's coil to satisfy the zone's sensible demand. While occupied mode provides the required primary air flow for the zone.

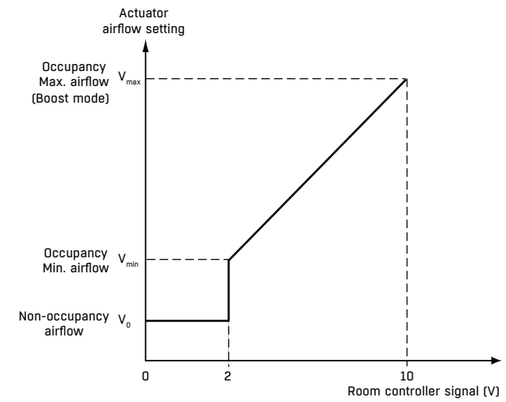

NOTE: When using a Pi® actuator, a PIR or CO_2 sensor (or both) must provide occupancy feedback. Duct pressure must maintained between .02-.06 in w.c..

CAUTION: If a Pi® actuator is installed on a LYRA II IQCC as a part of a retrofit, a damper before the chilled beam is not necessary and any previously installed dampers should be set to a fully open position or removed.

DRYWALL FLANGE KITS

To be used when mounting a LYRA II IQCC in drywall or ceilings requiring flange trim.

See **FIGURE 8** for dimensions.

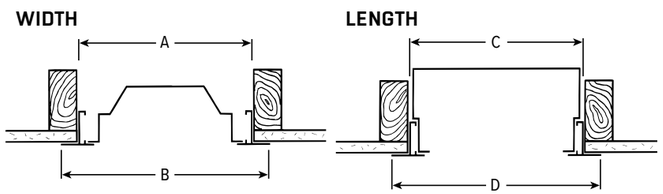

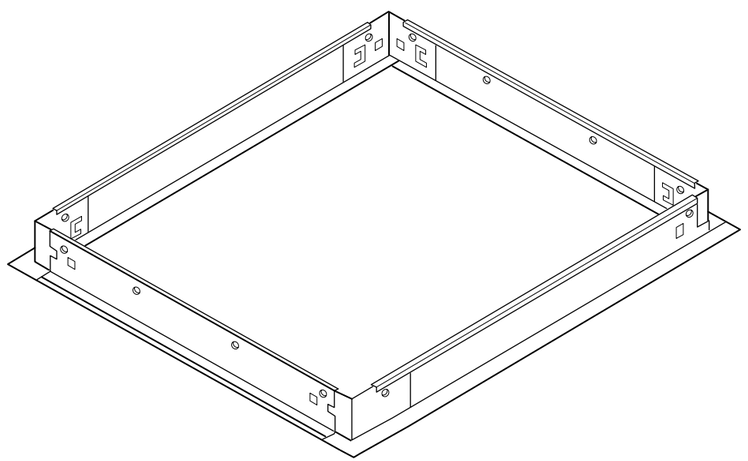

	LYRA IQCC DRYWALL KIT: OVERALL DIMENSIONS	
	2' x 2'	2' x 4'
DIMENSION "A" WIDTH (ROUGH-IN)	24 3/8"	24 3/8"
DIMENSION "C" LENGTH (ROUGH-IN)	24 3/8"	48 3/8"
DIMENSION "B" WIDTH (FINISH TRIM SIZE)	25 5/16"	25 5/16"
DIMENSION "D" LENGTH (FINISH TRIM SIZE)	25 5/16"	25 5/16"

FIGURE 5. Drywall kit overall dimensions

***NOTE:** For 4' fixtures in continuous rows, add 48" to length. For continuous row installations, order one individual unit and balance in extension drywall kit rough-in sections.

TECHNICAL AND SOUND DATA

CONDITIONS FOR COOLING PERFORMANCE TABLES

Total cooling effect of beam, P_{tot} = cooling effect of coil, P_{coil} + cooling effect of supply air, P_{air}.

- Air side total pressure drop of 0.28 in. w.c..
- Water flow rate of 0.8 gpm per circuit.
- Δt = 14.4° F between room temperature and mean water temperature.
- Δt = 14.4° F between room temperature and supply air temperature.

Performance for water flows other than 0.28 in. w.c. can be found in the FläktGroup® SEMCO® product selection tool, SELECT.

The tables here are based on tests done according to the EN 15116 standard. The purpose of this standard is to be able to compare different chilled beams on the same terms. The external heat supply method has been used where heating has been supplied evenly over the floors and walls such that the on-coil temperature is the same as the temperature at 43.3 in. above floor level (seated head height). In actual conditions, the temperature t should be increased by 1.8° F to avoid over dimensioning the beam.

This means that the table value concerned can be increased by 10%. As such it is not uncommon for selections in SELECT to have 1.8° F increase between ceiling temperature and room temperature.

DEFINITIONS

q_{AIR}	Supply airflow, cfm
P_{tot}	Total cooling effect, BTU/HR
P_{coil}	Cooling effect of the coil, BTU/HR
$P_{coil\ heat}$	Heating effect of the coil, BTU/HR
Δt	Difference between room air temperature and average water and air temperature, °F
ΔP_w	Pressure drop water, ft. H_2O
Δt_w	(US imperial) - Δt_w (°F) = P batt (BTU/tim)/81177
L_{A10}	Sound pressure level in a room with 107 ft² room absorption, dB(A)

SOUND POWER LEVEL

LYRA II	CORRECTION K_{OCT} dB OCTAVE BAND, MID-FREQUENCY, Hz							
	63	125	250	500	1,000	2,000	4,000	8,000
60	4	-6	-2	-1	1	-3	-10	-16
120	4	-3	-3	-1	1	-3	-10	-17
TOL ±	6	3	2	2	2	2	2	3

The sound power levels for every octave band are obtained by, adding together the sound pressure level L_{A10}, dB(A), and the corrections K_{OCT} given in the table above, according to the folllowing formula:

$$L_W = L_{A10} + K_{OCT}$$

Correction K_{OCT} is the average in the area of application of the chilled beam.

SOUND ATTENUATION

The average sound attenuation ΔL of the chilled beam form duct to room includes the end reflection of the connecting duct.

LYRA II	SOUND ATTENUATION IN SUPPLY DUCT FOR THE BEAM ΔL, dB OCTAVE BAND, MID-FREQUENCY, Hz							
	63	125	250	500	1,000	2,000	4,000	8,000
60	19	7	6	8	4	10	12	4
120	19	7	6	7	9	11	13	5
TOL ±	6	3	2	2	2	2	2	3

L_{A10} Sound pressure level in a room with 108 ft² room absorption, dB(A).

TECHNICAL COOLING AND HEATING DATA

COOLING

LYRA II IQCC 060 — NORMAL AIRFLOW, 4.9" DIAMETER

NOZZLE mm	q_{AIR} CFM	P_{TOT} (BTU/HR) FOR Δt (°F)			P (BTU/HR) FOR t (°F)			L_{A10} dB(A)
		10.8°F	14.4°F	18°F	10.8°F	14.4°F	18°F	
06	11	569	70.3	836	395	529	662	<20
12	22	983	1,198	1,413	645	860	1,075	<20
18	32	1,276	1,539	1,802	788	1,051	1,314	<20
24	41	1,501	1,791	2,085	874	1,164	1,454	<20
30	49	1,696	2,006	2,317	932	1,242	1,553	<20
36	51	1,843	2,163	2,488	969	1,290	1,614	<20

FIGURE 9. Pressure drop, ΔP_W = 1.7 ft. H_2O

LYRA II IQCC 060 — HIGH AIRFLOW, 4.9" DIAMETER

NOZZLE mm	q_{AIR} CFM	P_{TOT} (BTU/HR) FOR Δt (°F)			P (BTU/HR) FOR t (°F)			L_{A10} dB(A)
		10.8°F	14.4°F	18°F	10.8°F	14.4°F	18°F	
06	18	809	986	1,160	526	700	874	<20
12	34	1,348	1,621	1,894	819	1,092	1,365	<20
18	50	1,750	2,078	2,402	979	1,303	1,631	<20
24	65	2,061	2,412	2,760	1,051	1,402	1,754	23
30	77	2,283	2,638	2,992	1,068	1,423	1,778	26
36	89	2,450	2,805	3,160	1,068	1,423	1,778	29

FIGURE 10. Pressure drop, ΔP_W = 1.7 ft. H_2O

LYRA II IQCC 120 — NORMAL AIRFLOW, 4.9" DIAMETER

NOZZLE mm	q_{AIR} CFM	P_{TOT} (BTU/HR) FOR Δt (°F)			P (BTU/HR) FOR t (°F)			L_{A10} dB(A)
		10.8°F	14.4°F	18°F	10.8°F	14.4°F	18°F	
06	21	1,170	1,450	1,730	839	1,119	1,399	<20
12	37	1,802	2,211	2,621	1,232	1,641	2,051	<20
18	53	2,296	2,791	3,286	1,481	1,976	2,470	<20
24	67	2,621	3,146	3,675	1,583	2,109	2,638	<20
30	81	2,887	3,429	3,972	1,628	2,170	2,713	22
36	93	3,115	3,675	4,238	1,682	2,242	2,801	26

FIGURE 11. Pressure drop, ΔP_W = 3.0 ft. H_2O

LYRA II IQCC 120 — HIGH AIRFLOW, 4.9" DIAMETER

NOZZLE mm	q_{AIR} CFM	P_{TOT} (BTU/HR) FOR Δt (°F)			P (BTU/HR) FOR Δt (°F)			L_{A10} dB(A)
		10.8°F	14.4°F	18°F	10.8°F	14.4°F	18°F	
06	32	142	175	207	97	129	161	<20
12	57	219	265	311	138	184	230	<20
18	80	274	327	380	159	211	264	23
24	101	312	367	423	166	222	277	31
30	120	341	370	453	168	224	280	34
36	134	361	417	474	169	225	282	36

FIGURE 12. Pressure drop, ΔP_W = 3.0 ft. H_2O

LYRA II IQCC 120 — HIGH AIRFLOW, 6.3" DIAMETER

NOZZLE mm	q_{AIR} CFM	P_{TOT} (BTU/HR) FOR Δt (°F)			P (BTU/HR) FOR t (°F)			L_{A10} dB(A)
		10.8°F	14.4°F	18°F	10.8°F	14.4°F	18°F	
06	33	146	178	211	98	131	164	<20
12	58	223	269	316	140	186	233	<20
18	82	280	334	388	162	216	270	<20
24	107	327	384	441	172	230	287	24
30	130	365	424	483	178	237	296	28
36	150	396	457	517	181	242	302	31

FIGURE 13. Pressure drop, ΔP_W = 3.0 ft. H_2O

HEATING

LYRA II IQCC 060 — NORMAL AIRFLOW, 4.9" DIAMETER

NOZZLE mm	q_{AIR} CFM	$P_{COIL\ HEAT}$ (BTU/HR) FOR t (°F)			L_{A10} dB(A)
		10.8°F	14.4°F	18°F	
06	11	283	375	471	<20
12	22	427	570	713	<20
18	32	526	700	874	<20
24	41	584	778	973	<20
30	49	624	833	1,041	<20
36	57	642	856	1,071	<20

FIGURE 14. Pressure drop, ΔP_W = 2.0 ft. H_2O

LYRA II IQCC 060 — HIGH AIRFLOW, 4.9" DIAMETER

NOZZLE mm	q_{AIR} CFM	P_{TOT} (BTU/HR) FOR t (°F)			L_{A10} dB(A)
		10.8°F	14.4°F	18°F	
06	18	386	515	645	<20
12	34	543	723	904	<20
18	50	628	836	1,044	<20
24	65	655	874	1,092	23
30	79	662	884	1,106	26
36	89	672	897	1,123	29

FIGURE 15. Pressure drop, ΔP_W = 2.0 ft. H_2O

LYRA II IQCC 120 — NORMAL AIRFLOW, 4.9" DIAMETER

NOZZLE mm	q_{AIR} CFM	P_{TOT} (BTU/HR) FOR t (°F)			L_{A10} dB(A)
		10.8°F	14.4°F	18°F	
06	21	628	836	1,044	<20
12	37	867	1,157	1,467	<20
18	53	1,058	1,409	1,761	<20
24	67	1,177	1,570	1,962	<20
30	81	1,259	1,679	2,098	22
36	93	1,297	1,727	2,160	26

FIGURE 16. Pressure drop, ΔP_W = 3.3 ft. H_2O

LYRA II IQCC 120 — HIGH AIRFLOW, 4.9" DIAMETER

NOZZLE mm	q_{AIR} CFM	P_{TOT} (BTU/HR) FOR t (°F)			L_{A10} dB(A)
		10.8°F	14.4°F	18°F	
06	32	805	1,071	1,341	<20
12	57	1,092	1,454	1,819	<20
18	80	1,273	1,699	2,119	23
24	101	1,310	1,747	2,184	31
30	120	1,327	1,771	2,214	34
36	133	1,334	1,778	2,221	36

FIGURE 17. Pressure drop, ΔP_W = 3.3 ft. H_2O

LYRA II IQCC 120 — HIGH AIRFLOW, 6.3" DIAMETER

NOZZLE mm	q_{AIR} CFM	P_{TOT} (BTU/HR) FOR t (°F)			L_{A10} dB(A)
		10.8°F	14.4°F	18°F	
06	33	816	1,088	1,361	<20
12	58	1,102	1,470	1,839	<20
18	80	1,276	1,703	2,129	<20
24	107	1,368	1,822	2,279	24
30	130	1,399	1,863	2,330	28
36	150	1,423	1,897	2,371	31

FIGURE 18. Pressure drop, ΔP_W = 3.3 ft. H_2O
NOTE: Pressure drop listed with water flow, q_W = 0.8 GPM

DIMENSIONS AND WEIGHTS

LYRA II IQCC 60 — RECESSED

IQCC-060-bb-c-dd-4

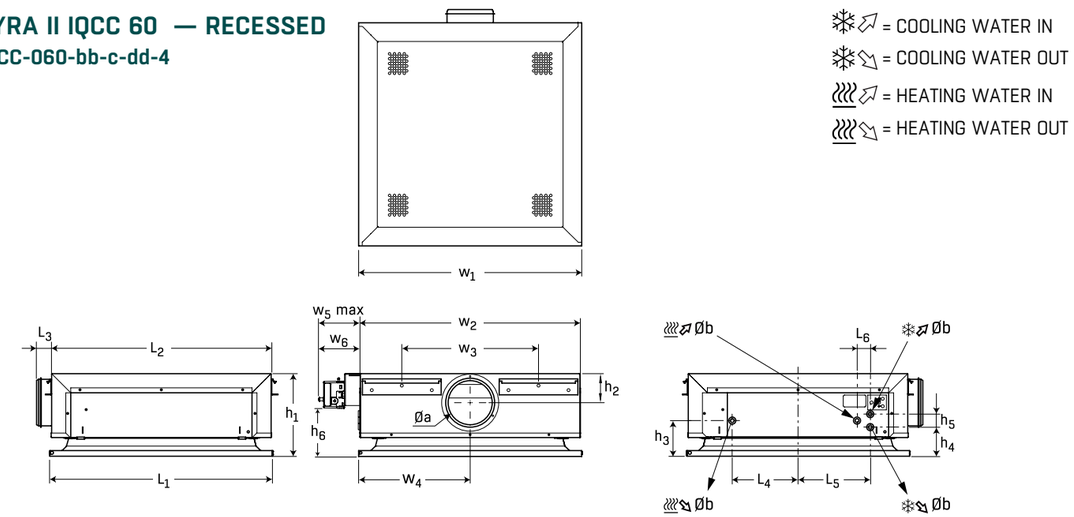

Øa	Øb	h1	h2	h3	h4	h5	h6	L1	L2	L3	L4	L5	L6	w1	w2	w3	w4	w5	w6
4.9"	0.6"	8.7"	3.0"	3.7"	3.1"	1.4"	5.1"	24.1"	23.0"	1.6"	6.9"	7.7"	1.4"	23.8"	23.1"	14.3"	11.7"	5.5"	3.7"

LYRA II IQCC 60 — FREELY SUSPENDED

IQCC-060-bb-c-dd-4
IQAZ-33-060-c-ddd

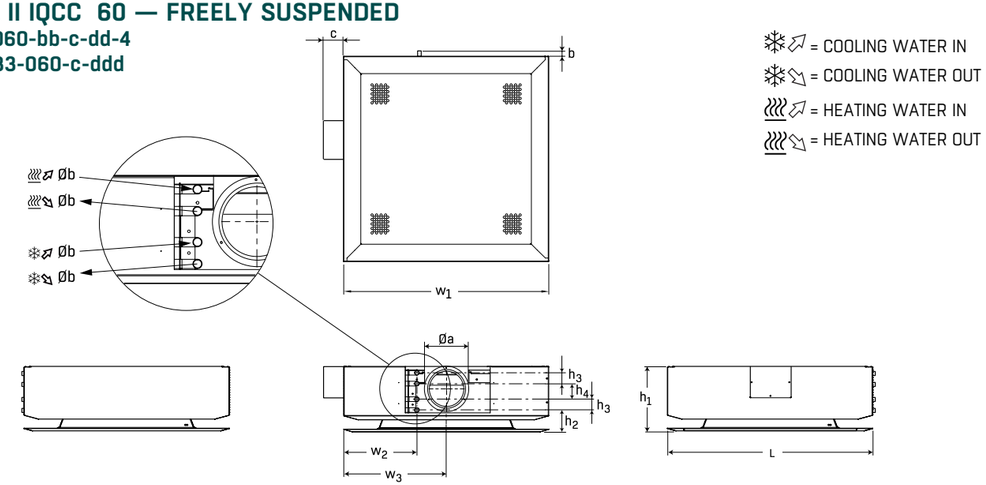

Øa	Øb	b	c	h1	h2	h3	h4	L	w1	w2	w3
4.9"	0.6"	0.8"	3.1"	8.7"	3.1"	1.4"	2.0"	28.5"	28.5"	10.2"	14.3"

AIR CONNECTION IS MALE
WATER CONNECTIONS ARE MALE

VERSION	DELIVERY WEIGHT	OPERATING WEIGHT (INCL. WATER) COOLING	WATER VOLUME COOLING	OPERATING WEIGHT (INCL. WATER) COOLING & HEATING	WATER VOLUME HEATING
LYRA II IQCC -060, RECESSED	35.3 lb.	37.5 lb	0.3 gal	39.7 lb	0.1 gal
LYRA II IQCC -060, EXPOSED	39.7 lb.	41.9 lb.	0.3 gal	44.1 lb.	0.1 gal

LYRA II IQCC 120 — RECESSED

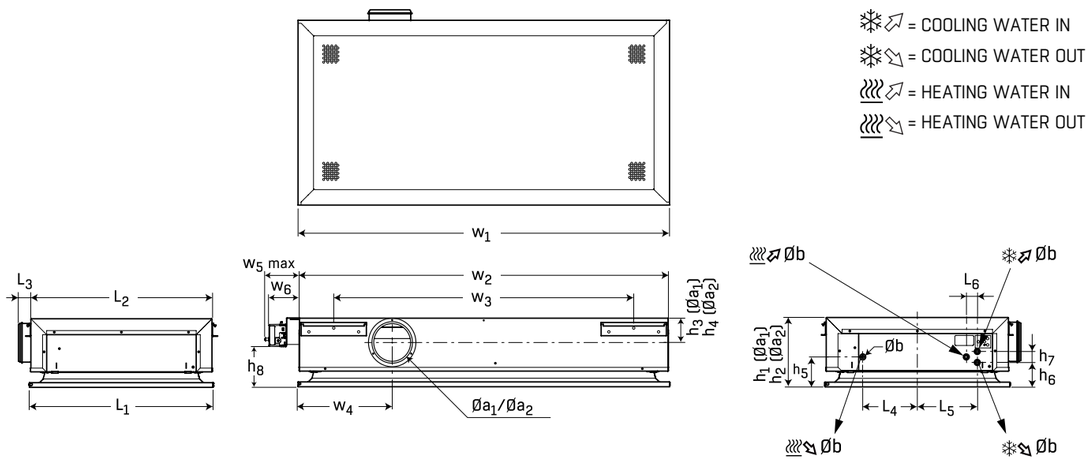

Øa1	Øa2	Øb	h1	h2	h3	h4	h5	h6	h7	h8	L1	L2	L3	L4	L5	L6	w1	w2	w3	w4	w5	w6
4.9"	6.3"	0.6"	8.7"	8.9"	3.0"	3.8"	3.7"	3.1"	1.4"	5.1"	24.1"	23.0"	1.6"	6.9"	7.7"	1.4"	47.8"	76.7"	38.1"	11.7"	5.5"	3.7"

LYRA II IQCC 120 — FREELY SUSPENDED

IQCC-120-bb-c-dd-1
IQAZ-33-120-c-ddd

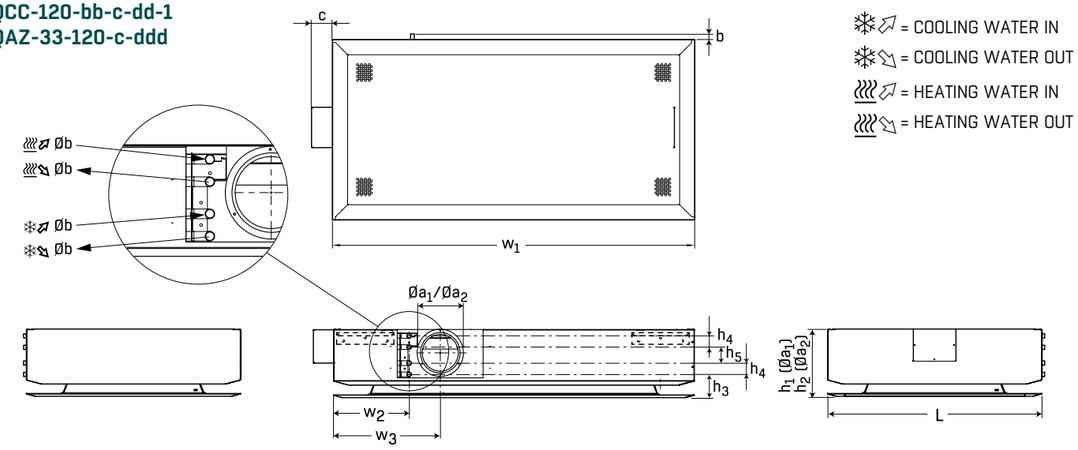

Øa	Øa2	Øb	b	c	h1	h2	h3	h4	h5	L	w1	w2	w3
4.9"	6.3"	0.6"	0.8"	3.1"	8.7"	10.0"	3.1"	1.4"	2.1"	28.5"	52.2"	10.2"	14.3"

AIR CONNECTION IS MALE
WATER CONNECTIONS ARE MALE

VERSION	DELIVERY WEIGHT	OPERATING WEIGHT (INCL. WATER) COOLING	WATER VOLUME COOLING	OPERATING WEIGHT (INCL. WATER) COOLING & HEATING	WATER VOLUME HEATING
LYRA II IQCC-120, RECESSED	63.9 lb.	68.3 lb	0.7 gal	70.5 lb	0.1 gal
LYRA II IQCC -120, EXPOSED	68.3 lb.	72.8 lb.	0.7 gal	75.1 lb.	0.1 gal

CABLE SUSPENSION

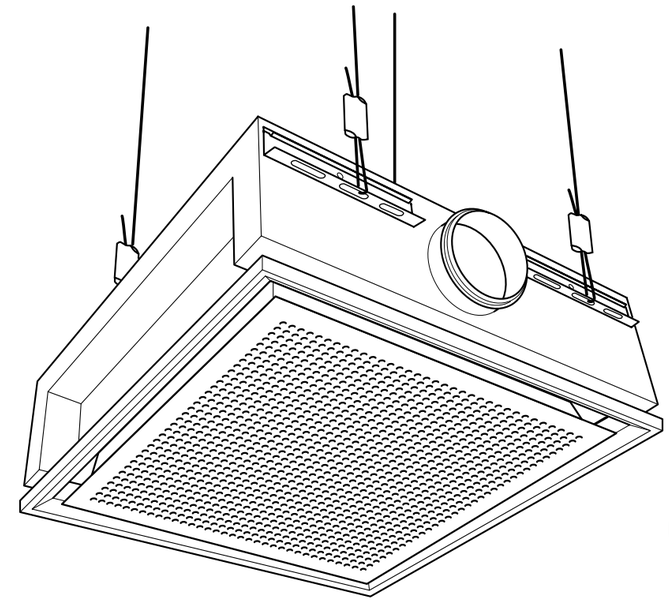

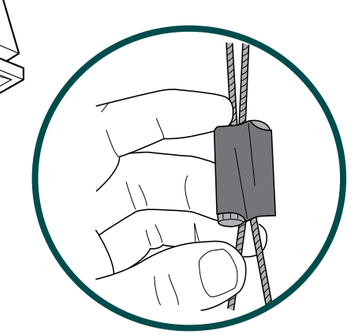

FIGURE 19. The LYRA II IQCC can be suspended by wires, in this case, the beam's height can easily be adjusted with a stepless fastening device. This type of installation is suitable for metal or concrete ceilings. Alternately, a wire can simply be wound round a bar in the ceiling. A special concrete fastener for concrete ceilings is included in every kit.

FIGURE 20. Close up of a suspension cable hanger

ACCESSORIES

INSTALLATION WITH FASTENING BRACKET

A suspension bracket facilitates the suspension of chilled beams from the ceiling. Two brackets are used for each beam. The brackets can be ordered in advance or along with the chilled beam. The suspension brackets can be fitted directly to the ceiling or onto channel support bars.The chilled beam is simply attached by pressing it against the bracket until it clicks into place. No tools are needed. After this, the chilled beam can be adjusted lengthwise by sliding the bracket along the beam's fastening points. To adjust it sideways, slide the threaded bars along the grooves in the bracket.

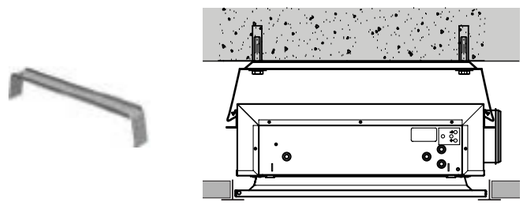

FIGURE 21. LYRA II IQCC fastening bracket

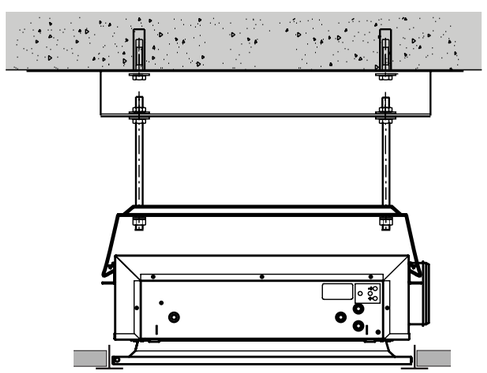

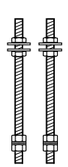

FIGURE 22. If there is a need for adjusting the installation height, suspension brackets and suspension rods can be ordered as well.

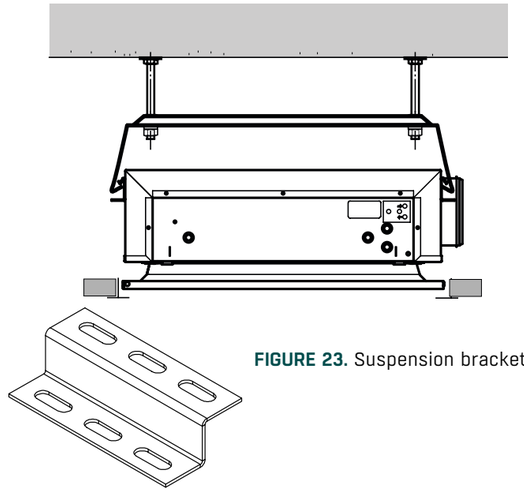

FIGURE 23. Suspension bracket

FREELY SUSPENDED

The LYRA II IQCC, can also be adapted for exposed installation, by adding an accessory which consists of casing and a front plate adapter. This accessory is fitted on the cassette while the cassette is suspended from the ceiling.

In the freely suspended version, the air outlet is specially designed to direct the airflow slightly upwards. This reduces the air velocity in the occupied zone and ensures that air from the room mixes with the chilled air before it reaches the occupied zone.

Directing the air upwards also creates the Coanda effect without needing to rely on nearby surfaces.

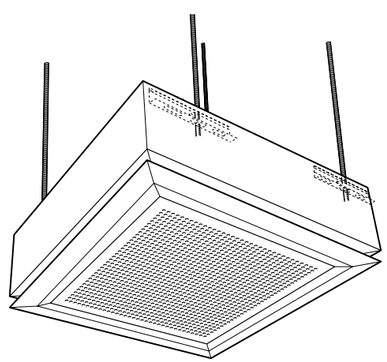

DUCT ENCLOSURE

Duct enclosure is available in three size ranges for concealing water pipes and air ducts:

- 12 to 20 in.
- 20 to 36 in.
- 36 to 67 in.

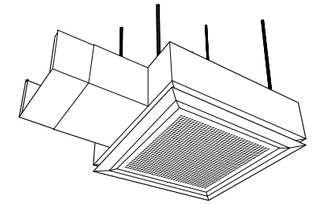

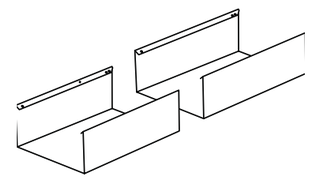

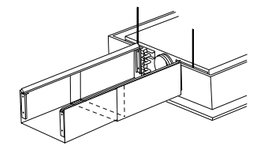

PURGING NIPPLE

The purging nipple is an optional accessory, that can be added in the selection tool.

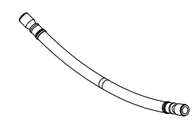

FIGURE 24. Flexible hose with push-on connection

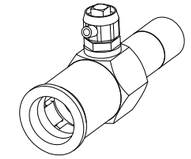

FIGURE 25. Purging nipple

PI® ACTUATOR NOZZLE

This chilled beam can be ordered with pressure independent airflow control function which requires installation of — nozzle actuator. The actuator also can be supplied loose for post installation.

ROOM CONTROLLER STRA-24

The STRA-24 is able to optimize energy consumption in rooms depending on different parameters: occupancy, CO_2 level and timetable.

Different modes are offered: OFF, standby, occupied, and boost. For each mode different sequences between water and air are possible.

For more information regarding this product and related accessories, please see the STRA-24 technical guide.

For more information on installation please see the LYRA II IQCC installation and owner's manual.

PRODUCT AND ACCESSORY CODES

PRODUCT CODES — LYRA II IQCC

IQCC-aaa-bb-c-dd-e

Nominal length (aaa)
060 = 2 ft.
120 = 4 ft.

Connections (bb)
12 = Water to the left of air
16 = 2 spigots (alt. connection)
Water near air connections

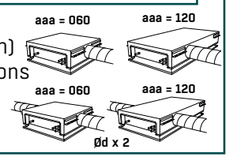

Coil (c)
1 = Cooling
2 = Cooling and heating
3 = Cooling with purging nipple
4 = Cooling and heating with purging nipple
5 = Cooling, G½" external thread, cylindrical
6 = Cooling and heating, G½" external thread, cylindrical

Energy control (dd)
01 = Standard airflow, without FPC, Ø125
02 = Standard airflow, with FPC, Ø125
03 = High airflow, without FPC, Ø125
04 = High airflow, with FPC, Ø125
05 = High airflow, without FPC, Ø160 (only aaa = 120)
06 = High airflow, with FPC, Ø160 (only aaa = 120)

Suspension alternatives (e)
4 = For installation in false ceiling
1 = For exposed installation (IQAZ-33 should be ordered separately)

ACCESSORIES

Pi® Function actuator — **IQAZ-35-bb-c-1-e**
With Modbus® Communication)

Chilled Beam (bb)
03 = IQCC, Ø125
04 = IQCC, Ø160

Cable execution (c)
1 = Cable 1 m without contact

Installation (e)
1 = Installed on chilled beam
2 = Supplied loose

Pre-set Pi actuator — **IQAZ-36-bbb-cccccc**

k100% (bbb)
335 = IQCC-060-bb-c-01/02-e
570 = IQCC-060-bb-c-03/04-e
585 = IQCC-120-bb-c-01/02-e
940 = IQCC-120-bb-c-03/04-e
960 = IQCC-120-bb-c-05/06-e

Airflow V_0, V_{MIN}, V_{MAX} in 1/s (cccccc)[2]
To convert cfm to l/s use the following formula: $cc_{l/s}$ = 9 cfm/2.12
cc---- = V_0
--cc-- = V_{MIN}
----cc = V_{MAX}

cc (L/S) = 9 (CFM) / 2.12

[2] Ordering example below for a 2 ft LYRA II IQCC with standard airflow
Eg: IQAZ-36-335-020420
- k100% = 335
- V_0 = 2 l/s (9_0 = 4 cfm)
- V_{MIN} = 4 l/s (9_{MIN} = 9 cfm)
- V_{MAX} = 20 l/s (9_{MAX} = 42 cfm)

ACCESSORIES CONTINUED

Casing freely suspended — **IQAZ-33-bbb-c-ddd**
(only for IQCC-aaa-12-c-dd-1)

Size (bbb)
060 = 2 ft.
120 = 4 ft.

Execution (c)
1 = Cooling, Ø125
2 = Cooling and heating, Ø125
3 = Cooling, Ø160 (only IQCC-120)
4 = Cooling and heating, Ø160 (only IQCC-120)
5 = Cooling, Ø125 with IQAZ-35
6 = Cooling and heating, Ø125 with IQAZ-35
7 = Cooling, Ø160 with IQAZ-35 (only IQCC-120)
8 = Cooling and heating, Ø160 with IQAZ-35 (only IQCC-120)

Duct enclosure (ddd)
000 = Without
050 = 30-50 cm (12-20 in.)
090 = 50-90 cm (20-35 in.)
170 = 90-170 cm (35-67 in.)

Integrated Control — **STRZ-76-bb-cc-d-ee**

Placement of controller (bb)
00 = Without room control (follower)
01 = Supplied loose
02 = Mounted on short side (only for e = 0 in IQCC)
03 = Integrated in front plate

Sensors, valve and actuator (cc)
12 = Cooling only, valve by others, and condensate sensor
13 = Cooling only, valve by others, passive infrared sensors (PIR)
14 = Cooling only, valve by others, condensate, and passive infrared sensors
16 = Cooling and heating, valves by others, and condensate sensor
17 = Cooling and heating, valves by others, and passive infrared sensors
18 = Cooling and heating, valves by others, condensate and passive infrared sensors

Connection (d)
1 = Terminal block

Chilled beam (ee)
03 = IQCC-060
04 = IQCC-120

NOTE: Valves provided by contractor must be of 24V type, 0-10V PWM or modulating.

Fastening brackets — **QFAZ-18-7-1**
Set with 2 pieces, unpainted, 1 set per beam

Suspension rods M8 — **QFAZ-12**
Set with 2 pieces, length 19.7", 2 sets per beam

Cable hanging system — **QFAZ-23-01-01**
(suspension system with wire)
Complete set for one chilled beam cassette, 4 wires, 4 concrete fasteners

Flexible Hose — **IQCB-HK-D**
Length = 24" hose with ½" NPT female one end G½" other

Flexible Hose — **IQCB-HK-E**
Length = 24" hose with ½" NPT female one end G½" other end shut off valve

Purging nipple — **IQAZ-32-15-0**
Push-on connection suitable for 15 mm plain tail coil

THIS PAGE WAS INTENTIONALLY LEFT BLANK

THIS PAGE WAS INTENTIONALLY LEFT BLANK

FläktGroup® SEMCO® delivers smart, energy-efficient, air-quality solutions to support every building application. We offer our customers innovative technologies, high-quality products and outstanding performance supported by more than fifty years of accumulated industry experience. The broadest offering on the market and a strong market presence in 65 countries worldwide guarantees that we are always by your side, ready to deliver: Excellence in Solutions.

FläktGroup® SEMCO®

Corporate Headquarters
1800 East Pointe Drive
Columbia, Missouri 65201 USA

573.443.1481

sales.semco@flaktgroup.com

To learn more about FläktGroup SEMCO offerings and to contact your nearest representative please visit

www.semcohvac.com

© Copyright 2022 SEMCO LLC. All Rights Reserved. SEMCO embraces a policy of continuous development and improvement, the right is reserved to supply products which may differ from those illustrated and described in this publication. Certified dimensions will be supplied upon request on receipt of order. Any FläktGroup SEMCO purchase is subject to FläktGroup SEMCO standard terms and conditions.. SEMCO are a registered Trademarks of SEMCO LLC. Other trademarks and logos in this publication may be property of SEMCO, LLC, its subsidiaries or any of its related companies and/or other organizations or individuals.