FläktGroup®

SEMCO®

NEUTON®

CONTROLLED CHILLED BEAM PUMP MODULE

TECHNICAL GUIDE

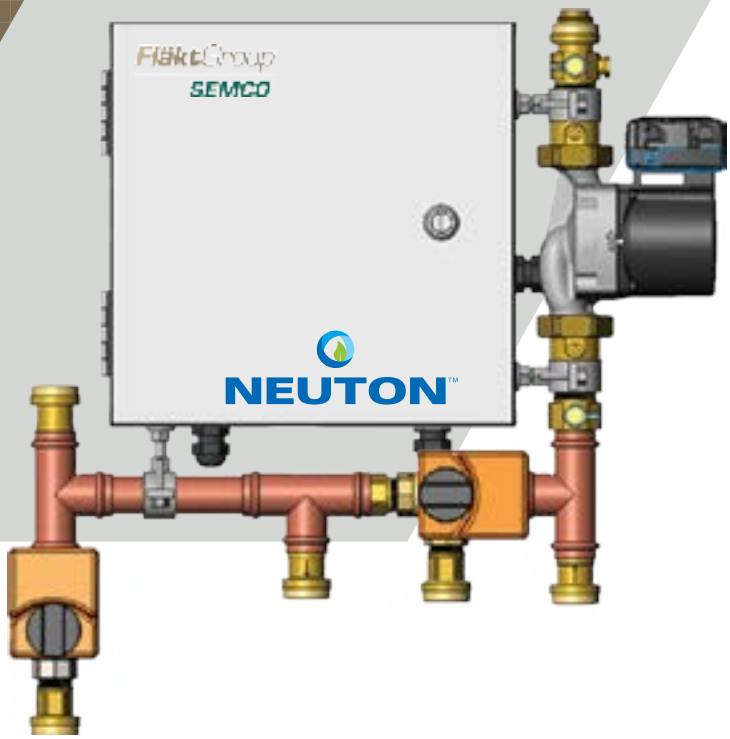

TABLE OF CONTENTS

Section 1: Features and Benefits 1
Section 2: NEUTON® Product Description 2
Section 3: NEUTON® Operation (How it Works) 3
Section 4: Traditional Chilled Beam Piping Schemes 5
Section 6: Integrated Controls Functionality 11
Section 7: Product Information 13
Section 8: Selection Example 18
Section 9: Installation 20
Section 10: Communications and Setpoint Modifications 21
Section 11: Important Design Guidelines 22
Section 12: Specifications 24
Appendix: 26

© SEMCO LLC 2022. All rights reserved.

The information in this manual is furnished for informational use only, is subject to change without notice, and should not be construed as a commitment by SEMCO LLC. SEMCO LLC assumes no responsibility for any errors that may appear in this manual.

No part of this publication may be reproduced, stored in a retrieval system or transmitted, in any form or by any means, electronic, mechanical, recording, or otherwise, without the prior written permission of SEMCO LLC.

U.S. patented technology: 9,625,222, 10,060,638.

SEMCO and the SEMCO logo are registered trademarks of SEMCO LLC. All other trademarks are registered to their respective companies. ZS Pro is owned by OEMCtrl.

SECTION 1: FEATURES AND BENEFITS

INTRODUCTION

Active chilled beams have been proven to be the most energy efficient way to provide sensible cooling and heating to a space, and are therefore being applied more frequently in the U.S. These installations have been mostly limited to high end projects where energy efficiency is given a high priority, such as LEED certified buildings.

High energy efficiency is achieved by satisfying most of the space sensible cooling and heating loads utilizing moderate temperature chilled and hot water, while minimizing the airflow ducted to the space. Typically, only the outdoor ventilation airflow is used by active beams to deliver the necessary cooling and heating energy to the space. Often this airflow will be only 35% - 50% of that used by conventional cooling systems (i.e. VAV or fan coil systems) which results in substantial fan energy savings (see **FIGURE 16**).

Numerous other design advantages are provided by active chilled beams including low noise levels, reduced filter maintenance, ideal air distribution and improved indoor air quality. Despite these advantages, more wide spread acceptance of the technology has been limited due to several key design barriers facing the engineering community.

- The high cost of the primary and secondary piping – making the use of the technology more expensive than other more conventional systems.
- The concern for condensation on the surfaces of the coils contained within the beams
- Designing and implementing controls to properly operate the chilled beam network, optimize system performance, including communication with the dedicated outdoor air system (DOAS) – "plug and play" solutions
- The inability to use traditional chilled/hot water main loop temperatures (i.e. 42° and 120-180°) to serve the beam zones.

NEUTON® controlled chilled beam pump module (CCBPM) resolves all of these issues. It allows a chilled beam system to be installed at a cost similar to more conventional systems while providing superior performance, using a fully integrated "plug and play" controlled pump package optimized specifically for chilled beam applications.

KEY FEATURES AND BENEFITS

- **Reduce the cost of a chilled beam installation by 30% and more** – NEUTON® allows for smaller pipes, fittings and if the two pipe approach is employed, far less linear feet of pipe required by the main distribution loop (please see example details in **APPENDIX SECTION 2A**)
- **Serve the beams with conventional chilled/hot water temperatures** – no more need for secondary loops for the beams. Supply 42°F chilled water to the DOAS and beam zones
- **Simplify the installation, complexity and commissioning of a chilled beam system** – the plug and play NEUTON easily attaches to the primary and zone piping
  loops, includes almost all controls, sensors and wiring and is factory built and tested
- **Active condensation control system** – monitors the zone dew point and controls beam supply water to avoid condensing conditions while optimizing cooling output (no more system shut-downs by condensate sensors).
- **Eliminate frustration and cost of customized controls development and installation** – NEUTON® CCBPM includes on-board control logic that has been laboratory tested and specifically optimized for chilled beam systems. The DDC controller includes a port designed to communicate with other devices via industry standard BACnet over MS/TP (LON available).
- **Increase beam cooling and heating output** – NEUTON® allows all coils passes to be used for both cooling and heating, substantially improving beam performance and efficiency.
- **Cut the amount of zone piping and fittings in half (substantial cost reduction)** – when all coil passes are used for cooling and heating, four pipe beams become two pipe beams
- **Cut beam loop pump energy by up to 90%** - NEUTON® ECM high efficiency, variable speed pumps operate at a fraction of the cost of traditional pump loop and two-way valves (please see example details in **APPENDIX SECTION 1A**)

- **Increased chiller efficiency compared to conventional beam system designs** - traditional beam designs operate with low chilled water differential temperatures (typically 6°F) while NEUTON® results in differentials up to 14°F with higher return water temperatures
- **Improved response to occupied/unoccupied and low load conditions** – novel control sequences vary water flow and/or temperature to the beams, as needed,to adjust to step changes in space temperature (i.e. morning warm up) using "boost" mode.

SECTION 2: NEUTON® PRODUCT DESCRIPTION

NEUTON combines numerous key components to form a fully assembled, factory tested single zone pump module. These key components are identified numerically in **FIGURE 1**.

The integrated electrical/control panel **(1)** incorporates the DDC control board, circuit breaker and power strip. All wiring connections to the pump, supply water thermistor and control valves are factory made and tested.

The ECM high efficiency, variable speed pump **(2)** is preinstalled with two union connections to allow for easy replacement of the pump should it ever be required. In addition, the pump head is also easily removable.

The hot water control valve **(3)** and chilled water control valve **(4)** meter in the quantity of hot or cold primary loop water necessary to maintain the desired beam supply water temperature when blended with the beam return water loop **(7)**.

The hot water check valve **(6)** and chilled water check valve **(5)** isolate the pump module from the primary loop(s) when heating or cooling is not required. The hot water check valve is positioned to allow pressure relief and equalization with the chilled water loop.

The chilled water inlet connection **(8)** and hot water outlet connection **(9)** are strategically located next to the chilled water outlet connection **(5)** and hot water inlet connection **(6)** for ease of installation.

Pete's plugs pressure ports **(11)** are located on both the high and low pressure side of the pump to allow for easy flow capacity measurements during system commissioning and to estimate the external head pressure on the pump module.

A supply water **(10)** thermistor **(12)** is inserted into the downstream side of the pump and factory wired to the DDC control panel.

FIGURE 1. Component Layout

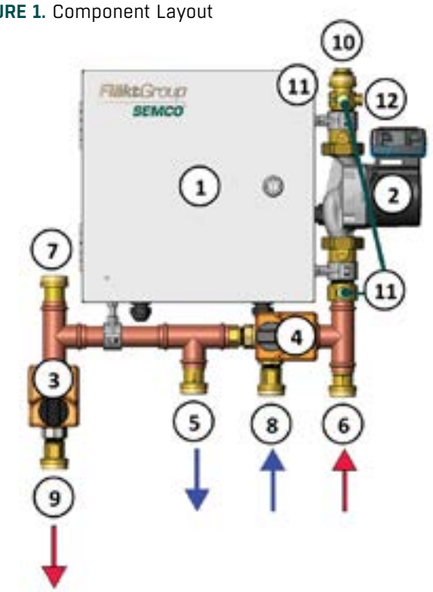

SECTION 3: NEUTON OPERATION (HOW IT WORKS)

The primary function of NEUTON® is to carefully blend the proper amount of primary loop water (hot or cold) with the recirculated secondary (zone) beam loop water to create the precalculated beam supply water temperature. This is important since chilled/heating beams cannot be served with very hot or very cold water. Typically, they are served with 58°F water during cooling to avoid condensation and 100°F water when heating to avoid stratification.

As shown in **FIGURE 2**, during the cooling mode, the chilled water control valve slowly injects chilled water from the primary loop. An equal amount of recirculated secondary loop water is discharged through the check-valve into the primary chilled water return loop. The hot water control valve is in the full bypass position and the corresponding check valve is closed, so the heating loop is isolated from the cooling loop.

In this way, conventional 42°F chilled water can be utilized within the primary loop to serve both the chilled beam zones and the dedicated outdoor air system – resulting in a more cost effective and energy efficient distribution system. The same benefit applies to the hot water loop.

Additionally, the 4 pipe primary loop is converted to a 2 pipe secondary loop in all beam zones. This reduces the cost and complexity of the zone piping and allows for all coil passes within the active or passive beam to be used for both heating and cooling, substantially increasing the output capacity.

During the heating mode, as depicted by **FIGURE 3**, the hot water check valve accepts water as needed from the primary heating loop while the hot water control valve simultaneously ejects recirculated secondary beam loop water into the primary hot water return loop. The chilled water control valve is in the full bypass position and the corresponding check valve is closed.

While a 4 pipe primary loop is shown for **FIGURES 2 and 3**, NEUTON® allows for the use of a 2 pipe primary loop which may further reduce project first cost, and is discussed later.

NEUTON® OPERATION (CONTROLS)

One of the key advantages offered by NEUTON is

FIGURE 2. Cooling Mode

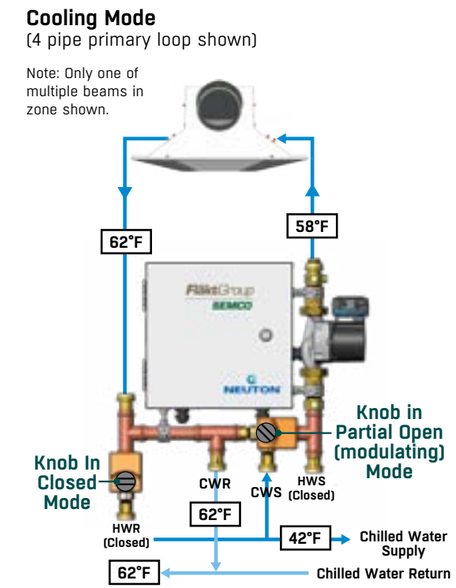

FIGURE 3. Heating Mode

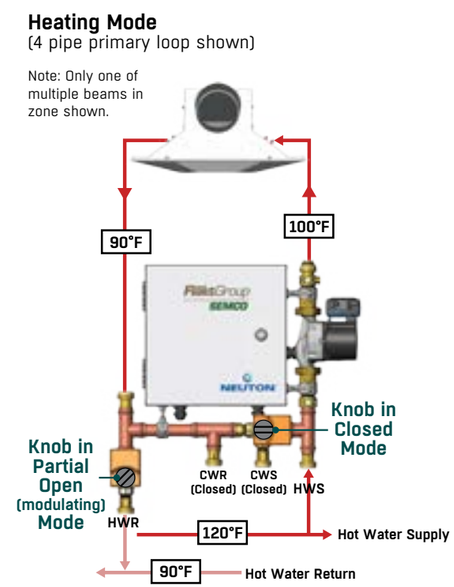

the integrated DDC control (See **FIGURE 4**) function complete with optimized control logic specifically designed for chilled/heating beam applications. Each NEUTON® can operate as either a stand-alone zone controller (no further communications required) or as part of a building wide network. The integrated DDC control board can communicate via BACnet® to both the main BAS system and/or the Pinnacle® DOAS system to optimize overall system performance.

Rather than cycling supply water on and off as with conventional beam designs, NEUTON® utilizes a high-efficiency ECM pump to modulate flow to the beams which significantly increases energy efficiency while ensuring quiet operation. The optimum flow for a given zone condition is automatically determined and maintained by the control logic, with a design water flow being inputted at the factory or by the installing contractor during startup.

The smart zone sensor monitors space temperature and dew point to provide a novel active condensation control strategy while continuing to provide space cooling. The supply water temperature during the cooling mode is maintained above the space dew point temperature at all times. Should the space dew point increase for any reason the supply water temperature is raised accordingly. At the same time the water flow to the beam is incrementally increased, when possible, to help maintain cooling output as needed during these conditions.

In heating mode, during morning warm-up or anytime a "boost mode is needed" the supply water temperature is temporarily reset to a higher temperature to increase the heating output from the beams until the desire space conditions are realized, then gradually reduced back to the desired default setting.

A similar boost mode is available during cooling, yet is accomplished with increased water flow as opposed to beam loop water temperature change. These boost modes are especially helpful when responding to morning cool down or warm up cycles following night setback or when responding to unoccupied modes. Both are accommodated by NEUTON® on-board logic.

An additional key advantage is that NEUTON® greatly reduces the complexity of the hydronic balancing process. The advanced control logic, once initially set to the design zone conditions, will allow the pump

FIGURE 4. Basic control scheme

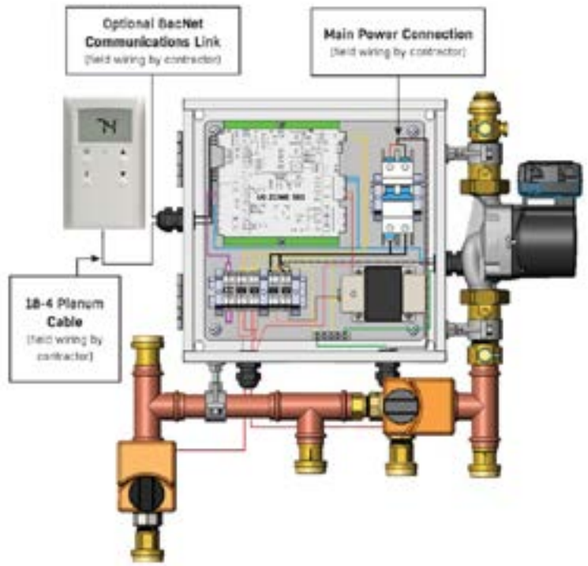

speed to be self-adjusting to respond to a given space load. The chilled water flow will be lowered or increased to match the space cooling load and the hot water flow and temperature will be optimized to match the heating output required. As a result, the zone is essentially self-balancing.

SECTION 4: TRADITIONAL CHILLED BEAM PIPING SCHEMES

TRADITIONAL PIPING SCHEME FOR CHILLED BEAMS (COOLING PRIMARY LOOP SHOWN)

Chilled/heating beams must be served by moderate temperature chilled (typically 58°F) and hot water (typically 100°F). The supply chilled water temperatures must always be maintained above the room dew point to avoid the risk of beam condensation. The hot water supply temperature should be moderate to avoid stratification within the space.

The fact that these requirements are substantially different than the chilled and hot water temperature required for the dedicated outdoor air system or other heating/cooling devices within the space adds complexity and cost to the primary cooling and heating loop designs.

Specifically, heat exchangers must be employed in both the chilled and hot water primary loops, two chillers/boilers must be employed or some other method for satisfying the dual loop temperature requirements.

In addition, the size of the secondary loop piping must be increased to accommodate the higher flows necessitated by the more moderate water temperatures. This has a significant impact on the installed cost of the pipe loops. **FIGURE 5** shows an example of a traditional chilled beam piping scheme. In this case, the cooling primary loop schematic is shown.

FIGURE 5. Traditional chilled beam primary and secondary piping scheme (cooling primary loop shown)

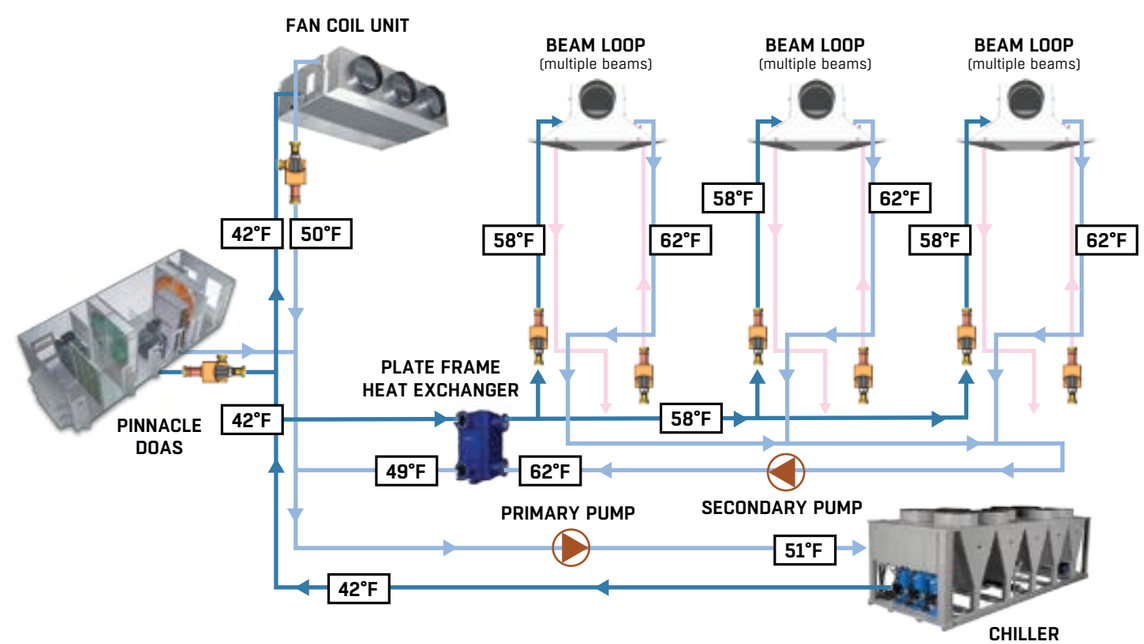

TRADITIONAL PIPING SCHEME FOR CHILLED BEAMS (HEATING PRIMARY LOOP SHOWN)

FIGURE 6 depicts a traditional chilled beam pipe schematic with the heating primary loop shown. The same challenges presented by the cooling scheme (need to add a secondary loop and increase secondary loop pipe size) exist in the heating mode.

Additional challenges exist with the secondary loop, chilled beam zone piping. As shown, 4 pipe beams must be utilized to accommodate heating and cooling. This means that only a portion of the passes within the beam can be used for each function. Secondly, four distribution pipes must be run throughout the beam zone as a result of the 4 pipe coils.

The net result is a higher than desired installation cost associated with the reduced capacity of each beam (longer or more beams required to satisfy space loads) and the associated piping necessitated by the 4 pipe coils (two control valves and four pipes serving beams in the occupied spaces).

Therefore, it would be highly advantageous to reduce secondary loop installation costs along with the high cost associated with the primary distribution loop (i.e. due to adding two plate frame heat exchangers, installing and controlling the two secondary plate frame heat exchanger loops and the high cost of increased pipe diameter required by the traditional design approach).

FIGURE 6. Traditional chilled beam primary and secondary piping scheme (heating primary loop shown)

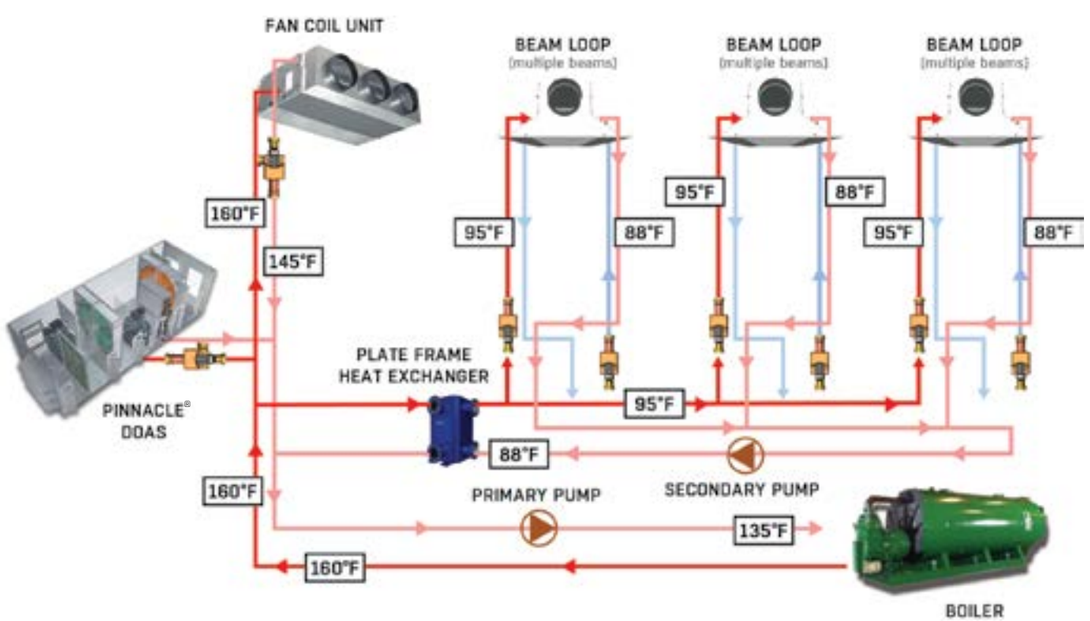

SECTION 5: ADVANCED PIPING SCHEMES WITH NEUTON

NEUTON ADVANCED 4 PIPE DESIGN SCHEME FOR CHILLED BEAMS (COOLING PRIMARY LOOP SHOWN)

NEUTON® can substantially reduce the installed cost of a chilled beam piping system while improving system efficiency and controllability. This section focuses on benefits offered by reducing the complexity and cost of the primary and secondary piping loops. The many system performance advantages are discussed in later sections of this document.

FIGURE 7 is identical to the **FIGURE 5** in equipment scope but incorporates NEUTON® modules to serve each zone fitted with the chilled/heating beams. A visual comparison of the two figures (7 vs 5) clearly highlights advantages offered by NEUTON®. These involve secondary pipe size and cost, eliminating piping in the beam zone, increased cooling/heating output from the beams and simplified controls.

NEUTON® eliminates the need for a secondary cooling and heating piping loop. NEUTON® allows the same water temperature to be used by the DOAS, conventional terminal devices and the beam zones in both the cooling and heating modes.

NEUTON® reduces the primary pipe size serving the beam zones for both cooling and heating, resulting in significant project first cost savings. Since a more typical 42°F can be delivered to the beam zone in lieu of the much warmer 58°F water require by the traditional approach, the water flow rate required to cool the zone is reduced by approximately 70%. Likewise, when in the heating mode the hot water flow rate can be cut by up to 80%. This reduction in water flow rates is commensurate with a 73% reduction in the installed cost of the primary piping serving the beam zones for a typical size school facility. Since the cost of piping is the most expensive portion of most chilled beam systems, this design modification is highly beneficial.

SECTION 2A within the APPENDIX section provides

FIGURE 7. Advanced NEUTON® piping scheme (4 pipe approach - cooling primary loop highlighted)

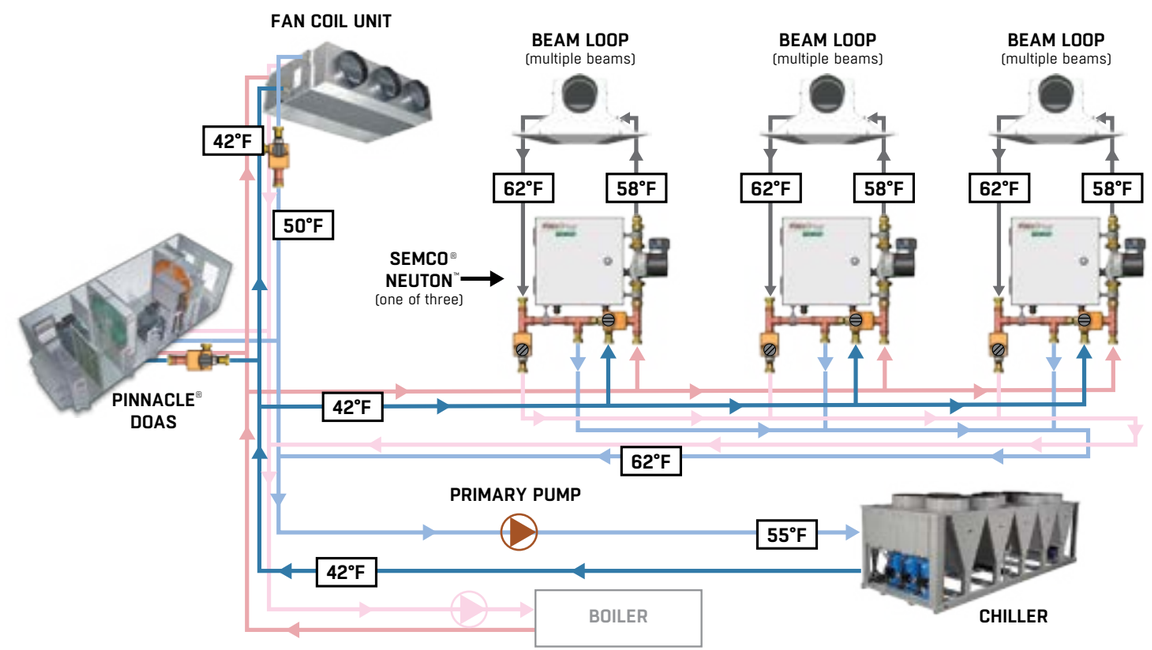

and actual example, documenting the substantial cost reduction potential and other additional benefits associated with the primary pipe sizing when NEUTON® devices are employed. Please be sure to review this section for actual cost comparisons, system analyses and graphical presentation of results.

NEUTON® cuts the beam zone piping in half since it turns the 4 pipe zone loop into a high - efficiency 2 pipe beam loop. Since NEUTON® allows all coil passes contained within the beam to be used for either heating or cooling, the zone piping required is cut in half. Since the control valves are incorporated into NEUTON® along with the DDC controls, the labor required to install those items is also substantially reduced.

NEUTON® increases the cooling and heating capacity delivered by a given beam selection. Since all passes of the beam coil are used when cooling and heating, the capacity output from a given beam selection is increased by 20 to 30% versus the same beam produced and operated in a traditional 4 pipe coil design. As a result, a zone can often be satisfied with fewer beams or the same number of shorter beams. This reduces project first cost.

NEUTON® REDUCES THE BEAM ZONE PUMP ENERGY BY UP TO 85%. Since NEUTON® incorporates a high efficiency ECM variable speed pump at each zone, the advanced control logic integral to the device varies the flow in response to space load. A traditional system utilizes an on/off valve relying on the main loop pump pressure to modulate the beam output capacity. Substantial energy savings result especially at reduced load conditions. A side benefit is that the noise associated with cycling valves is eliminated.

SECTION 1A within the **APPENDIX** section provides and actual example, documenting the energy savings potential associated with the high efficiency, variable speed pump incorporated within NEUTON® compared to traditional chilled beam system designs. Please review this section for actual calculations and graphical presentation of results.

NEUTON® advanced 2 pipe design scheme for chilled beams (cooling primary loop shown)

NEUTON® can also be employed to make further reduction in the primary piping loop installation cost by allowing for a novel two pipe design approach. Rather than requiring a supply and return primary piping loop for both the chilled and hot water distribution (4 pipe), the incorporation of NEUTON devices allows chilled and hot water to be pulled from the primary loops with the return water being injected back into the same primary loop (1 pipe).

For many building types, the 2 pipe approach can significantly reduce the cost of the primary distribution piping; the most costly component of a chilled/heating beam system. (1 pipe approach if it is a cooling only design). This benefit becomes clear when comparing **FIGURES 5 and 7** with **FIGURE 8**. The 2 pipe approach shown as **FIGURE 8** uses half of the piping length required for the chilled beam portion of the project when compared to the other figures.

In the 2 pipe approach, the chilled water loop temperature increases as it circulates through the building as each NEUTON® injects warmer return water back into the same loop. This unconventional – variable water temperature – approach is possible since NEUTON® can operate with any chilled water temperature that is less than or equal to the design beam supply temperature (typically 58°F). A common design scheme would be for the chilled water loop to be fed by a variable speed primary pump, operated to maintain the water temperature after the last NEUTON® at 56°F.

It should be clear that the same approach is equally effective for the hot water heating loop. Chilled water is emphasized here as an example.

NEUTON® 2 pipe approach requires less linear feet of piping but a larger pipe size than that required by the 4 pipe approach. It is important to point out that while the overall piping cost associated with the 2 pipe approach will typically be less than the 4 pipe approach when both systems employ a NEUTON®, the pipe diameter and water flow through the 2 pipe distribution system will be greater. This is simply a reflection of the elevated chilled water or more moderate hot water temperatures that result from the injection of return water into the same distribution loop.

In almost all cases, the 2 pipe approach will result in a lower project first cost than the 4 pipe option. However,

an economic analysis comparing the two systems can be easily completed, as shown in **APPENDIX SECTION 2A** of this document, to confirm which approach is most effective for a given project.

Once again, **SECTION 2A** within the **APPENDIX** provides an actual example, documenting the substantial cost reduction potential and other additional benefits associated with the primary pipe sizing when NEUTON® devices are employed. Please be sure to review this section for actual cost comparisons, system analyses and graphical presentation of results.

All other advantages associated with NEUTON 4 pipe approach are still provided. All of the many installation advantages outlined for the CCPM 4 pipe approach are still provided by the 2 pipe option. All passes of the beam can be used for both heating and cooling, the zone piping is reduced to a 2 pipe loop, the installation cost is reduced substantially, active condensation control is provided along with integrated controls and pump energy remains a fraction of what it would be with a traditional chilled beam design.

NEUTON® CONFIGURED TO SERVE MULTIPLE ZONES/OFFICES WITH SIMILAR LOAD PROFILES

It will be very common to have a project that involves multiple large zones (i.e. classrooms, labs, open office space) but also numerous small zones (individual offices) served by only one chilled/heating beam. It is not practical or necessary to have a pump module for each of these smaller zones.

NEUTON® has the capacity to serve numerous offices with one unit. The flow capacity is typically adequate to serve 8 to 10 individual offices each containing one chilled beam served by 1 GPM of water flow. Each office can have an individual thermostat controlling a traditional on/off control valve. The main control

FIGURE 8. Advanced NEUTON® piping scheme (2 pipe approach - cooling primary loop highlighted)

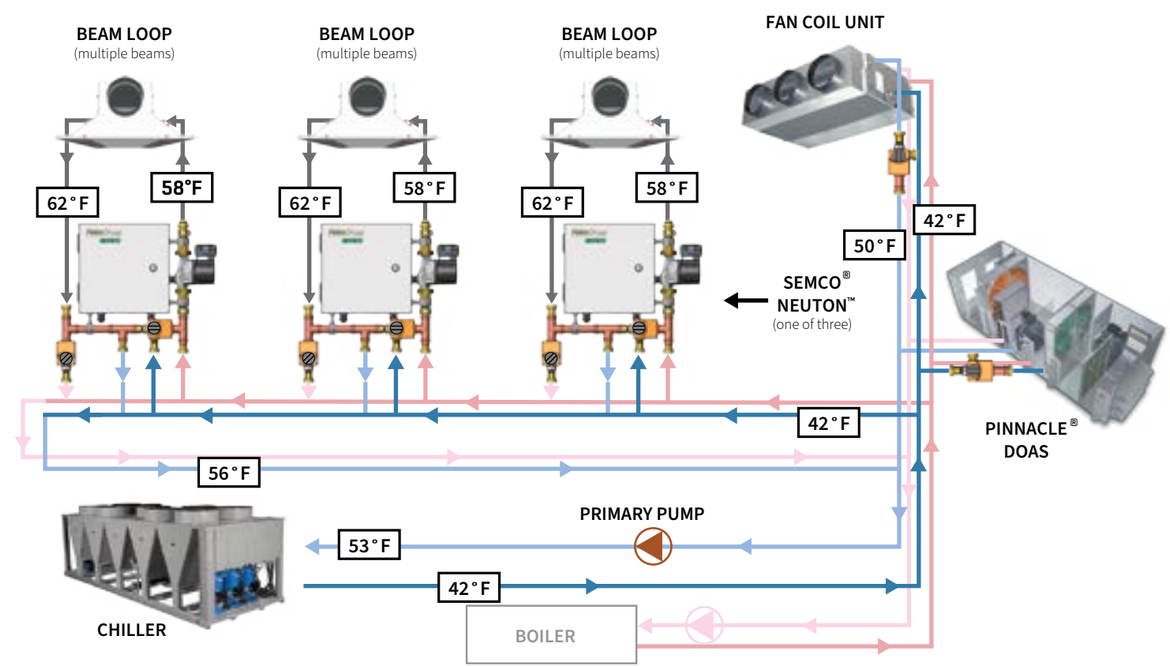

smart sensor feeding the CCBPM must be located in a "representative office" or return air plenum leaving the bank of offices in order to determine cooling/heating demand and space dew point for condensation control.

The main design requirement for using this approach is to be certain that each of the offices have a similar load profile. For example, all have similar window area, are facing a similar direction and have a similar number of occupants. It is a good idea to locate the main smart sensor within the zone that is likely to see the highest latent load profile. Traditional condensation sensors that close water to the beams can be easily employed with this approach as an additional safety mechanism if there is a concern for fluctuations in the humidity levels of the offices served.

FIGURE 9 provides a schematic showing how a single NEUTON can be configured to serve multiple offices. In this case, rather than NEUTON® serving a single zone, it is serving a bank of numerous small zones, each having a beam or two. In this configuration, NEUTON® delivers the necessary water flow and temperature needed along with other key control functions, while traditional control valves modulate the amount of heating or cooling output delivered to the individual offices.

This allows the use of the traditional chilled and hot water main loop temperatures, as with the larger zones. It also provides the many operational and piping first cost advantages previously discussed while allowing small offices/zones to employ NEUTON® devices in a cost effective manner.

Placement of the smart sensor when serving multiple spaces is important since it needs to maintain the active condensation management effectively. The zones must have similar load profiles to install the smart sensor in a common return plenum. If one zone is likely to experience a higher latent load then the others (i.e. more people) then the smart sensor can be installed in this zone and used to determine NEUTON® control for all zones. In the rare instance where multiple zones might experience significant swings in sensible and latent loads, a smart sensor can be installed in each zone with all sensors daisy-chained back to the CCBPM so that the controller is driven by the zone with the highest load.

FIGURE 9. NEUTON® applied to serve multiple offices with one device

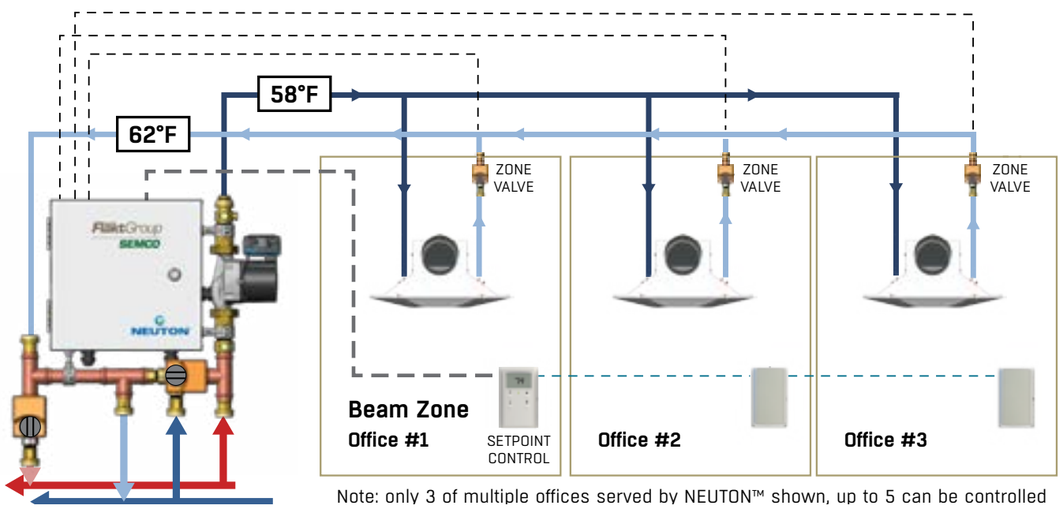

Note: only 3 of multiple offices served by NEUTON™ shown, up to 5 can be controlled

SECTION 6: INTEGRATED CONTROLS FUNCTIONALITY

NEUTON® ACTIVE CONDENSATION PREVENTION AT THE CHILLED BEAM COIL SURFACE

One of the main barriers to acceptance and application of the chilled beam technology outside of the "dry" northern European climates is the concern for condensation on the chilled beam coil surface. This is a critical design component that must be considered in any design involving chilled beams. If the water temperature delivered to the beams is low enough or the space humidity high enough for the air entering the coil to reach the saturation dew point at the coil surface, condensation may occur.

The traditional "state of the art" approach to addressing condensation control in chilled beams involves turning off the water to the beams when a condensation sensor is tripped. There are two major problems with this approach. First, this type of condensation sensor has been found to be unreliable in many cases – often providing false condensation signals. Secondly, it is not generally acceptable to turn off cooling completely to the occupied spaces.

NEUTON® has the capability of solving these problems by simultaneously responding to potential condensing conditions while also delivering a chilled beam coil cooling power output that is at or near the design maximum. To accomplish this, the zone temperature and humidity sensor shown in **FIGURE 4** feeds data to the NEUTON® controller where the space dew point is calculated at any moment in time. This value is then compared with the chilled water temperature delivered to the chilled beams serving the zone and leaving NEUTON®, measured by the water temperature sensor. The water temperature leaving NEUTON® is controlled by the supply water set point. This set point is a predetermined input to the control logic based on the design space loads, but automatically resettable within the program by the program logic, to account for scenarios including condensation control, boost mode, heating/cooling change over and other situations.

If the measured room dew point rises to within 1 to 2° F (the predetermined dead band, reflecting the accuracy of the temperature/humidity sensors used) of the supply water temperature, the supply water temperature set point is carefully and incrementally reset. This is accomplished by a PID loop (proportional/integral/derivative) within the control logic to maintain the cooling supply water temperature above the actual room dew point by the predetermined dead band value. In this manner, active condensation control is initiated without eliminating cooling of the space.

As the cooling supply water temperature delivered to the beams is increased to avoid condensation, the amount of cooling output from the beam decreases. However, when conditions allow, NEUTON® automatically adjusts to maximize the cooling output during such cases.

As the supply water temperature is incrementally increased to avoid condensing conditions, the space temperature sensor is simultaneously monitored. If the space temperature is determined to be above the cooling set point (i.e. additional cooling is required) as a result of the increased cooling supply water temperature, then a second PID loop controlling the variable speed pump increases the water flow incrementally until either the space conditions are satisfied or the pump reaches its maximum allowable flow setting. If the maximum water flow conditions are met and the space temperature conditions are still not satisfied using the minimum cooling supply water temperature allowed by the active condensation control logic, an alarm is sent to the main building automation system (BAS).

NEUTON FLEXIBILITY TO RESPOND TO VARYING LOAD CONDITIONS (BOOST MODE)

With traditional chilled beam designs, peak cooling and heating loads are estimated. Based on these estimates a number of beams of a given length, a primary airflow, a supply water temperature and a water flow are selected for each zone. At peak conditions the flow is provided continuously and at part load conditions, the water flow is cycled on an off, not modulated. Likewise, the water temperature to all zones is the same.

Since the water flow and temperature can be varied

zone by zone, NEUTON® provides far more flexibility to accommodate variations in load conditions. This is an important advantage over the traditional chilled beam systems.

NEUTON® logic provides for an effective "boost" mode for both cooling and heating modes. For example, it is common that the greatest need for space cooling occurs when the outdoor air is hot and sunny. At such times, the space dew point conditions are generally much less than at peak design, due to the fact that the infiltration air does not have the maximum absolute humidity content. Therefore, at times when the sensible load is at its peak – when the most cooling output is needed from the chilled beams – the space dew point will often be below its design maximum.

NEUTON® can take full advantage of such conditions by using the feedback from the zone temperature and humidity sensors, on a zone by zone basis, to reset the chilled water temperature delivered to the chilled beams downward and/or to increase the water flow. In this way NEUTON® takes full advantage of the off peak space latent load (reduced space dew point) to provide the maximum possible cooling output to the space.

It should be clear that there is also a significant benefit associated with the ability to operate in a heating season boost mode. As discussed previously, the heating capacity required by a given zone can often be satisfied at a reduced water flow (typically one half) when compared to that needed for cooling. To optimize pump energy savings, NEUTON® automatically operates the heating water flow at this lower level when appropriate to provide better comfort control and to substantially reduce pumping energy.

The mode is highly beneficial when a night setback temperature is used and there is a need to heat an unoccupied space quickly to reach the occupied set point. The same is true on extremely cold days. NEUTON® increases the heating output, when required, by incrementally raising the heating supply water temperature to the zone beam loop. If more heating is desired after reaching the maximum supply water temperature allowed, NEUTON® will then increase the hot water flow, as needed, to further increase the heating output to the space.

INHERENT DESIGN FLEXIBILITY (HIGHLY VALUABLE TO THE DESIGN ENGINEER)

Another example of where the variable capacity offered by NEUTON® is highly beneficial is when, after occupancy, it is discovered that the actual cooling/heating load within a given space is greater than the design values estimated. This could occur due to a design error, a change of use for the space, increased occupancy or for numerous other reasons. NEUTON® provides the flexibility to either increase the design water flow or decrease/increase the water temperature to a given space without having to impact the adjacent zones or the main water loop pump capacity. This is not easily done with traditional chilled beam system.

SECTION 7: PRODUCT INFORMATION

NEUTON is available in two model sizes. The only difference being the water flow capacity delivered by the device (pump capacity) and the Cv used for the control valves. The energy consumption and electrical loads on both units are very similar. All dimensions are the same for both units. Key performance parameters for the two units are provided in **TABLE 1**.

TABLE 1. Key performance parameters for NEUTON product offering.

MODEL	VOLTAGE	DEVICE FLA (1)	PUMP DATA		RATED FLOW (2)	DIMENSIONS	PIPE CONNECTION
			MAX ENERGY USE	MAX AMPS	GPM AT EXTERNAL FEET OF HEAD	(H X W X DEPTH)	DIAMETER
CCBPM-11	230/1/60	1.2 amps	87 watts	.71 amps	11 gpm - 12 ft	21.4" x 21.3" x 9"	1"
CCBPM-20	230/1/60	2.5 amps	450 watts	2.0 amps	20 gpm - 30 ft	30.1" x 38.9" x 10"	2"
CCBPM-30	230/1/60	3.0 amps	607 watts	2.68 amps	30 gpm - 40 ft	30.1" x 38.9" x 10"	2"
Note 1: Amps shown are for entire pump module and include controller, sensor, breaker, etc. Note 2: Rated flow shown at 12 ft. of external head, internal losses included in pump module curves.							

Key performance metrics for the NEUTON pump module models: CCBPM-11, CCBPM-20, and CCBPM-30.

ZONE SENSOR METRIC	
Temperature and Humidity (standard), CO_2 (optional)	
Large, easy-to-read LCD display on sensor	
Alarm indicator	
SENSING ELEMENT RANGE ACCURACY	
Temperature	50°F to 104°F (10°C to 40°C) ±0.5°F (0.3°C)
Humidity	10% to 90% ±1.8% typical
CO_2	±30PPM or +/-3% of reading
POWER REQUIREMENTS/ SUPPLY	DDC controller supplies the Rnet zone sensor with 12 Vdc @ 210 mA. (no additional power required)
COMMUNICATION	115 kbps Rnet connection between sensor(s) and controller
LOCAL ACCESS PORT	For connecting a laptop computer to the local equipment for maintenance and commissioning
MOUNTING DIMENSIONS	Standard 4"x2" electrical box using provided 6/32" x 1/2" mounting screws

OPTIONAL ZONE SENSOR

While NEUTON® can be served by BACnet® communications relaying zone sensors supplied by the controls contractor, it is recommended that the optional ZS Pro Zone Sensor be used. This sensor has been proven to provide the desired performance, limits the field wiring required and allows for important setpoints to be made at the sensor level vs. connecting to a computer. Other important advantages exist. The ZS Pro sensor metrics are shown below.

FIELD WIRING OPTIONS/REQUIREMENTS

FIGURE 10. Schematic showing field electrical connections

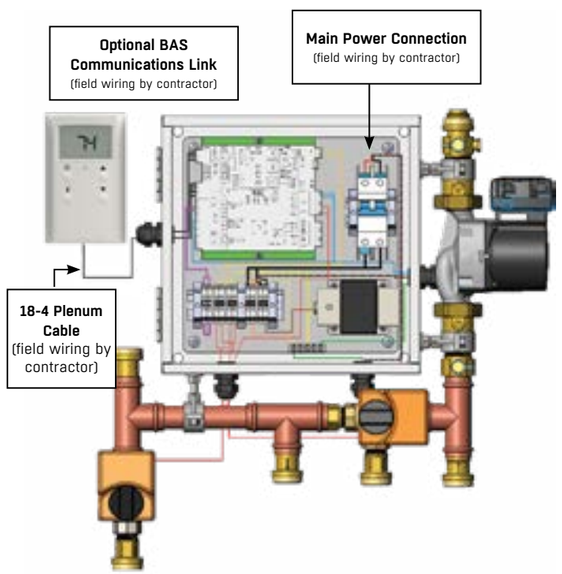

One of the substantial benefits offered by NEUTON® is that in addition to the onboard DDC controls, much of the piping and wiring typically completed in the field is included within the factory assembled and pretested module.

As shown in **FIGURE 10**, a typical application involves only two field wiring connections. The main power needs to be landed at the integrated circuit breaker. Additionally, the ZS Pro Zone Sensor needs to be wired to the Rnet terminals located on the integrated DDC control board.

Since the ZS Pro sensor is designed for integration with the I/O Zone 583 DDC controller incorporated into the NEUTON® electrical cabinet, communications are done using the Rnet communications port and, as a result, only a 4 wire connection is required even if the combined temperature, relative humidity and CO_2 sensor is utilized.

If NEUTON® is connected to a network via BACnet® and/or the zone conditions are provided to the pump module in this manner, an additional connection is easily made at the BACnet® communications port standard with the I/O Zone 583 DDC controller. This connection can be seen on the electrical diagram provided as **FIGURE 11.**

ELECTRICAL SCHEMATIC: NEUTON™, DUAL VALVE PUMP MODULE - SINGLE ZONE

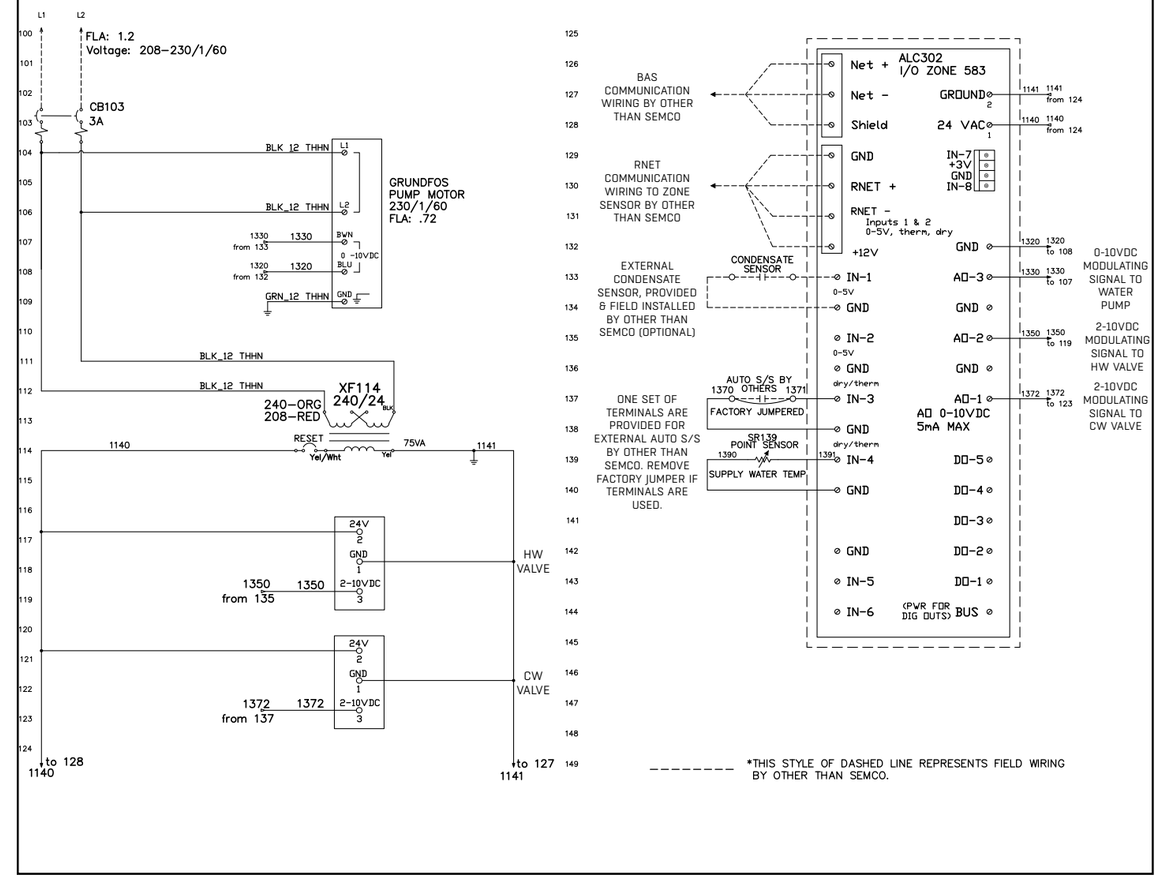

FIGURE 11. Electrical schematic for NEUTON® showing main power, zone sensor and BAS connections.

NEUTON® FLOW CAPACITY CURVES: CCBPM-11 AND CCBPM-30

Both NEUTON® models incorporate a high efficiency (ECM motor), variable speed in communication with the integrated DDC controller. The DDC controller sends a signal that is modulated between 3 and 10 volts to deliver optimum amount of the zone supply water as determined by NEUTON® logic.

FIGURE 12 shows the capacity curves for NEUTON®-11 and NEUTON®-30 models. These capacity curves plot zone water flow in gallons per minute (GPM) against available zone loop (external to the CCBPM device) head pressure (in feet of water) for various pump speeds (shown in volts). The model number designation is a function of these capacity curves.

NEUTON®-11 is given its designation since it has the capability of delivering a 11 GPM flow rate at an external (in addition to the internal losses of the device) head pressure of 12 feet. Likewise, NEUTON®-30 has the capability of delivering an 30 GPM flow rate at an external (in addition to the internal losses of the device) head pressure of 40 feet.

The piping of a chilled/heating beam zone is done with the beams in parallel (not series) to minimize the loop pressure losses (see **FIGURES 7, 8 AND 13**). The head loss through the beam is primarily a function of water flow and length of beam. For example, an 8' beam served by .75 GPM (typical cooling minimum flow) will have a loss of approximately 3 feet while the same beam served with 1.5 GPM (typical cooling maximum flow) will have a loss of approximately 9 feet. Accounting for the piping and other miscellaneous losses in a well-designed beam water distribution loop, the head loss requirements should range between a low of 6 feet and a high of approximately 14 feet.

Considering 12 feet of distribution loss to be typical, a zone designed with beams served by 1 GPM can accommodate up to 11 beams using a single CCBPM-11 device.

Applications like school classrooms will typically be designed using 4 to 6 chilled/heating beams, so the model CCBPM-11 will usually be the best selection. Larger laboratories, on the other hand, will often have zone utilizing 10 to 12 beams. In this case, the model CCBPM-11 will also be most appropriate. Very large zones, such as large open offices are best broken into multiple zones for control purposes so CCBPM-20 or 30 units will often provide the best solution.

Finally, rows of single offices, oriented such that the loads of each zone are similar (as shown schematically in **FIGURE 9**) can be served by either model depending upon the number of offices involved and the external loop pressure loss required.

The primary purpose for the capacity curves shown in **FIGURE 12** aside from the initial model selection is to determine the design flow rate "start setting" for the pump module for both the cooling and heating mode. This value can be factory set and is field adjustable via the ZS Pro smart sensor (if provided), or using an optional commissioning key pad connected to the DDC control board or via BACnet communications. The "start setting" represents the design water flow which is automatically modulated, when appropriate to optimize zone comfort control and pump energy (see Section 6).

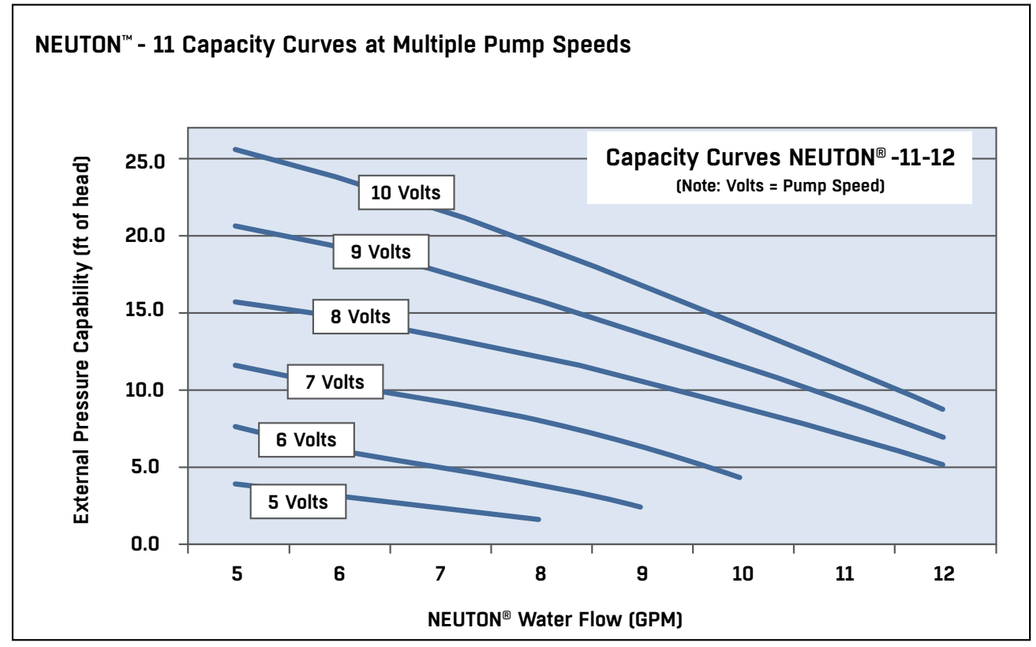

FIGURE 12. Capacity curves for NEUTON® CCBPM-11 and CCBPM-30 at various pump speeds

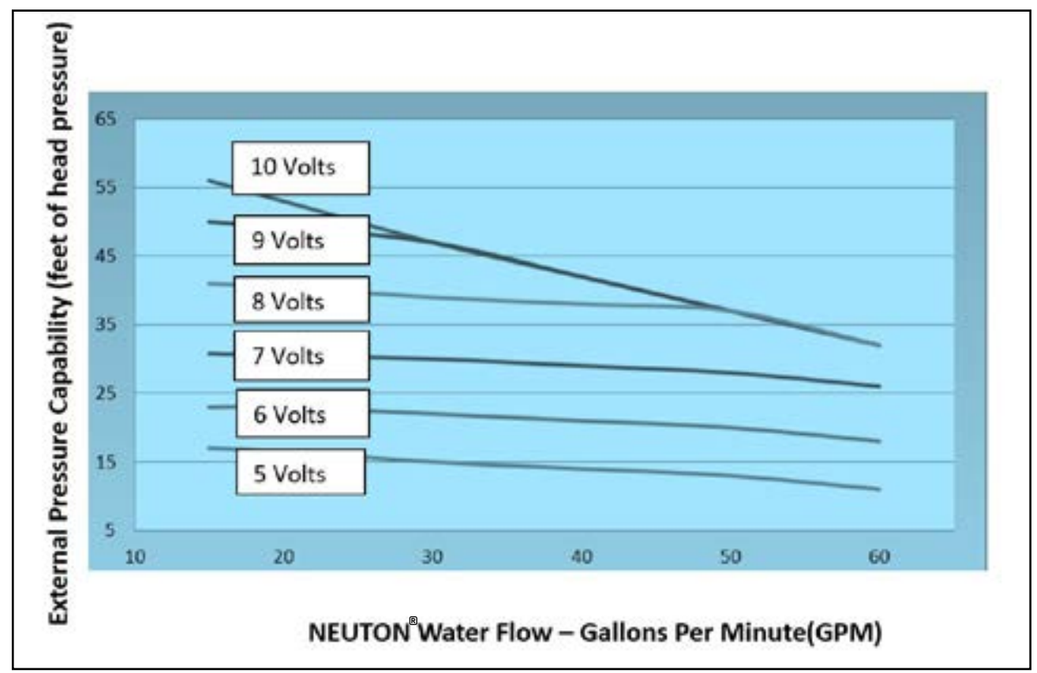

SECTION 8: SELECTION EXAMPLE

The process for selecting the pump module for a given zone is straightforward and does not require any additional engineering effort or data beyond that required for a conventional chilled beam design.

STEP 1: DETERMINE BEAM WATER FLOWS AND PRESSURE LOSSES

The zone loads and ventilation requirements are used by the FläktGroup® SEMCO® IQHC beam selection software to provide, amongst many other operating points, the desired water flow during cooling and heating as well as the pressure loss through the beam at that flow. Since the zone piping system is being configured with parallel distribution (see **FIGURE 13** as a guide), regardless of the number of beams used in the zone, the pressure allocated for the beams is the value shown for a single beam.

For this example, we will focus on the zone highlighted in green in **TABLE 2** below. Once the flows and pressure losses through the beam are known, the remaining loop pressure losses can be approximated.

STEP 2: DETERMINE THE ZONE BEAM LOOP WATER PRESSURE LOSSES

Knowing the beam water pressure loss (in this case 6.2 feet in cooling mode and 4.5 feet in heating mode), the total loop pressure loss can be estimated in the conventional manner based upon the diameter, length of pipe and associated fittings. For this simple example, we can refer to **FIGURE 13** as a reference.

Next, we need to know the length of pipe in the loop, the diameter of the pipe used and the number and type of fittings to estimate the remainder of the losses.

Example Assumptions:

COOLING MODE

- Total cooling flow through pipe – 4 beams * 1.25 GPM – 5 GPM
- Linear feet of pipe in loop – 100 feet
- Pipe diameter – 1" (having a pressure loss of 2.3 feet per 100 feet of pipe)
- Elbows – 6 total (each elbow having 5.2 feet of pipe equivalent for pressure loss)
- Tees – 4 total (each T having 3.2 feet of pipe equivalent for pressure loss)

The approximation for the total loop pressure loss during cooling would be as follows:

Total pressure loss $_{cooling}$ =
beam loss + pipe loss + elbows loss + tees loss

Total pressure loss $_{cooling}$ =
6.2 feet + 2.3 feet + .72 feet + .29 feet

Total pressure loss $_{cooling}$ = 9.5 feet

HEATING MODE

- Total heating flow through pipe – 4 beams * .75 GPM – 5 GPM
- All piping items the same

The approximation for the total loop pressure loss during heating would be as follows:

Total pressure loss $_{heating}$ = beam loss + pipe loss + elbows loss + tees loss

Total pressure loss $_{heating}$ = 4.5 feet + .82 feet + .26 feet + .10 feet

Total pressure loss $_{heating}$ = 5.7 feet

TABLE 2. Example chilled beam and water data.

CHILLED BEAM DEFINITION			WATER DATA (COOLING MODE)				WATER DATA (HEATING MODE)			
Number of Beams in Zone	Beam Model Type	Beam Length (feet)	Flow (gpm)	Pressure loss (feet)	Entering Temp. (°F)	Leaving Temp. (°F)	Flow (gpm)	Pressure loss (feet)	Entering Temp. (°F)	Leaving Temp. (°F)
4	IQHC - 2 pipe	8	1.5	7.1	57	62.0	1	5.4	120	102.8
1	IQHC - 2 pipe	8	0.75	4.5	57	68.3	0.5	3.6	120	77.4
4	IQHC - 2 pipe	8	1.25	6.2	57	65.5	0.75	4.5	120	88.5

FIGURE 13. Typical zone piping layout as reference for example

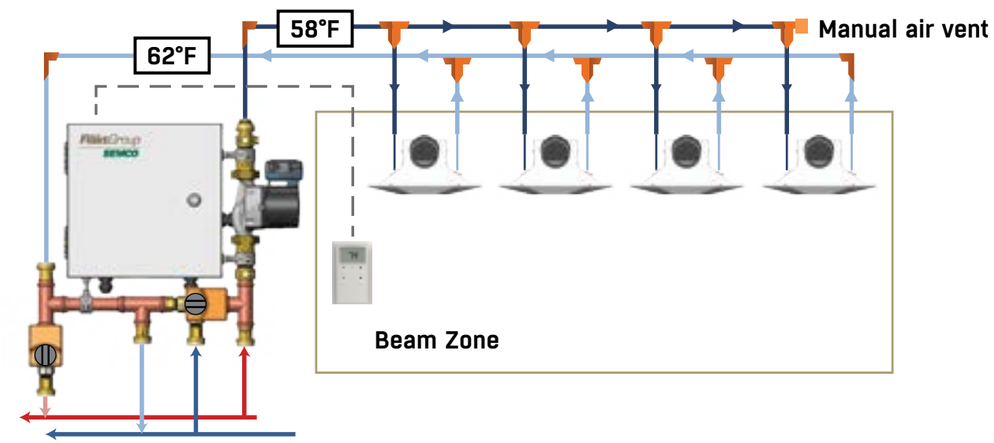

Step 3: Select NEUTON® model number and establish design starting pump speeds

We now know that we have a maximum flow of 5 GPM during the cooling mode. At this maximum zone water flow, we need an external head capacity of 9.5 feet to accommodate the beams, pipe and fittings. Adding a 15% safety margin, the result is a design condition of 5 GPM at 11 feet of external pump head pressure. We use these values along with the pump capacity curves shown as **Figure 12** to choose a NEUTON model and select the cooling mode starting pump speed (volts).

MODEL SELECTED

Looking at **FIGURE 12** it is clear that the smaller unit, model CCBPM-11 is very capable of processing the required flow and loop head pressure. This model would be selected since there is no benefit using the larger model for the conditions that result in this zone.

COOLING MODE STARTING PUMP SPEED

Looking at the upper chart in **FIGURE 12**, we use the intersection of 5 GPM and 11 feet of head pressure to determine that the setpoint value inserted into the DDC controller for the design starting pump speed during when in cooling is approximately 7 volts. This represents the pump speed that will provide the design water flow to the chilled beams when in the cooling mode. The control algorithms within NEUTON will modulate this pump speed, when appropriate, as discussed in Section 6 entitled Integrated Controls Functionality.

HEATING MODE STARTING PUMP SPEED

Repeating the same process for the heating mode flow and pressure and using **FIGURE 12**, we find the intersection of 5 GPM and 6 feet of head pressure to be a value of approximately 5.5 volts.

With this simple selection procedure, we have all of the information to know the correct NEUTON® model (in this case a CCBPM-11), cooling mode starting pump speed (7 volts) and heating season starting pump speed (5.5 volts).

SECTION 9: INSTALLATION

MOUNTING

NEUTON® device is designed such that the piping and all other components are rigidly attached to the electrical cabinet. As a result, the device is fastened directly to a wall, unistrut or similar mounting system, using bolts/screws inserted through the back wall of the electrical panel (pre-punched).

NEUTON® can be mounted in any configuration that allows the pump shaft to remain horizontal. The pump will not operate effectively with the pump shaft orientated in a vertical position and should not be installed in this manner (excessive bearing wear and premature pump failure will result). Keep in mind that the door to the electrical cabinet must also be readily accessible with enough room allocated such that the 12" door can swing freely and completely open.

FIGURE 14 shows the two most common mounting arrangements for NEUTON®. Note the dimensions shown on the diagram to the left. These represent the overall dimensions associated with the CCBPM-11 module. The diagram on the right represents the CCBPM-20 and CCBPM-30 modules.

At a minimum, 12" should be added to the width shown (23.5" dimension) and 8" to the depth shown (8.4" dimension shown) to allow reasonable service access to the pump and the valves and to allow for a full swing of the electrical panel door.

FIGURE 14. Figures showing the two most common mounting arrangements for NEUTON®

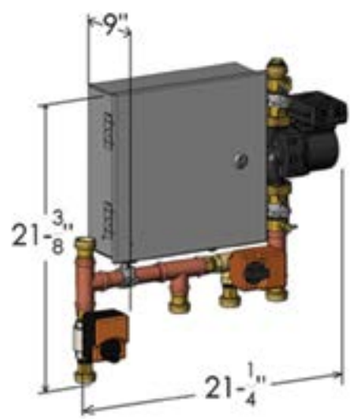

CCBPM-11

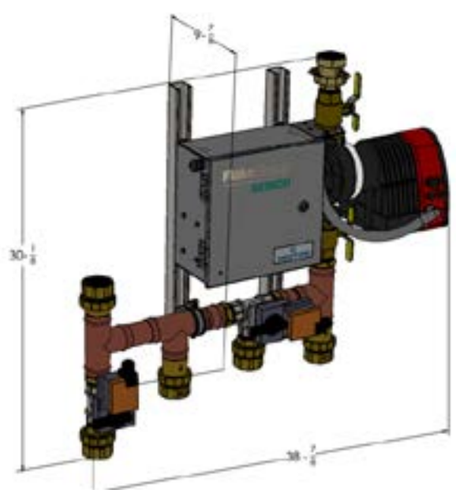

PIPING CONNECTIONS

Each of the 6 piping connection ports on CCBPM-11 are 1" female national pipe tapered (NPT) swivel half-union adapters with face gasket designed to connect to standard 1" male national pipe tapered fittings (NFT) to be provided by the installing contractor.

Piping connections on the CCBPM-20 & 30 are 2" FNPT swivel half-union adaptors with face gasket designed to connect to standard 2 " MNPT fittings to be provided by the installing contractor

SECTION 10: COMMUNICATIONS AND SETPOINT MODIFICATIONS

The internal DDC controller included with each NEUTON® comes standard with communications capability. The preferred communications protocol is BACnet® over MS/TP but other protocols are available (please contact factory). The BACnet® communications port is located on the DDC controller and is shown within the electrical diagram included as **FIGURE 11.**

Having the ability of networking NEUTON® with the Pinnacle® system(s) and main building automation system (BAS) allows for a design that can optimize overall system performance which greatly reduces overall energy consumption. By monitoring the dew points in all zones, as an example, the necessary supply air dew point from the Pinnacle system can be reset to reduce chilled water consumption. Likewise, alarms (i.e. potential condensation conditions) can be easily communicated to the BAS from the zone in question. Unoccupied periods can be scheduled and appropriate set points adjusted amongst many other operational advantages.

TABLE 3 provides a listing of communications points showing information that could be made available to the BAS by each NEUTON®.

SETPOINT MODIFICATIONS

Most setpoints required by NEUTON® are typical for chilled beam applications and are best kept at the factory default values. The known project setpoints, such as cooling and heating zone water design flow, design cooling and heating water temperatures, space temperature setpoints, etc. can be set at the factory before shipment when the project details are established.

In the case where certain setpoints are not previously established, need to be inserted in the field or there is a need in the future to modify a default setting, most

TABLE 3. Points list of for zone conditions available depending upon zone sensor option chosen

BACNET® POINTS AVAILABILITY: NEUTON® - 11, 20, AND 30		
	Option 1 **Room Sensors by BAS**	**Option 2** **Room Sensors by SEMCO**
Inputs	Zone Temperature (°F)	Not Required
	Zone Relative Humidity (%)	Not Required
	Zone Occupied Cooling Setpoint (°F)	Zone Occupied Cooling Setpoint (°F)
	Zone Occupied Heating Setpoint (°F)	Zone Occupied Heating Setpoint (°F)
	Zone Unoccupied Cooling Setpoint (°F)	Zone Unoccupied Cooling Setpoint (°F)
	Zone Unoccupied Heating Setpoint (°F)	Zone Unoccupied Heating Setpoint (°F)
	Zone Occupied (Y/N)	Zone Occupied (Y/N) [1]
Outputs		Zone Temperature (°F)
	Water Temperature to Beams (°F)	Water Temperature to Beams (°F)
	Zone Humidity Dewpoint (°F)	Zone Humidity Dewpoint (°F)
	Operating Mode (Heating or Cooling)	Operating Mode (Heating or Cooling)
	Pump Status (on/off)	Pump Status (on/off)
	Percent of Full Pump Speed (%)	Percent of Full Pump Speed (%)
Alarms	Potential Condensation Conditions in Zone	Potential Condensation Conditions in Zone
	Zone to Warm (cooling setpoint not met)	Zone to Warm (cooling setpoint not met)
	Zone to Cool (heating setpoint not met)	Zone to Cool (heating setpoint not met)
	Pump Failure	Pump Failure

Note 1: If room sensor includes CO_2 and used to determine occupancy, the BACnet® point is not required.

can be inputted or adjusted very simply via the LED display of the ZS Pro smart sensor.

For setpoint changes that cannot be made via the display on the smart sensor (not often required), a single commissioning keypad is available that can be plugged into the bottom of the ZS Pro smart sensor that will allow the user to easily adjust all setpoints for a given pump module while standing in the served space. Only one keypad is required for the entire project.

In the rare event that the ZS Pro is ordered with the CO_2 option and an atypical setpoint needs to be inserted, the commissioning keypad has to be connected directly to the control board mounted within the NEUTON® control panel due to power limitations at the sensor level.

FIGURE 15. Virtual BACview® Keypad (Optional)

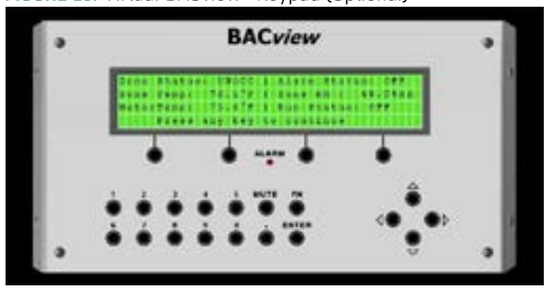

NETWORK ADDRESSING

The virtual commissioning keypad will be required to set network addresses for NEUTON® if the network address falls outside of commonly used default range for BACnet® devices. Once again, an uncommon network address can be easily set at the keypad level using the ZS Pro access port provided that the CO_2 option is not ordered. If NEUTON® uses zone sensors by others and is linked with BACnet® communications, the address setup will have to be completed with the commissioning keypad connected to the BACnet® terminals on the DDC board located within the NEUTON® panel.

The virtual commissioning keypad (See **FIGURE 15**) is shipped with a USB-L cable, which is used to connect to to a laptop USB port and the access port, located on the bottom of the ZS Pro zone sensor as well as the DDC control board.

SECTION 11: IMPORTANT DESIGN GUIDELINES

Designing the chilled/heating beam pump system that incorporates NEUTON® will simplify both the design process for the engineer and the installation complexity for the contractor. While most aspects of the design scheme will be very familiar to the engineering community, several topics merit mentioning to avoid the possibility for confusion or design errors

COOLING AND HEATING LOOPS MUST CONTAIN THE SAME CHEMICAL TREATMENT (IF ANY)

As with any design using all passes of the beam coil for both cooling and heating, a small portion of the cooling loop water will be mixed with the heating loop water and vice versa. As a result, the water treatment (if any) in one primary loop should be the same as in the second. This is not generally considered a problem by most engineers; however, if this is a concern for any reason this issue can be easily addressed by isolating the equipment that requires the chemical treatment (i.e. glycol) from the chilled beam primary loop.

For example, if there is a concern for freezing the cooling coil in the Pinnacle or other dedicated outdoor air system prompting the addition of glycol, a plate frame heat exchanger as shown in **FIGURE 5** would be used to isolate the loop serving the DOAS containing glycol from the rest of the cooling loop. This allows all of the benefits associated with the use of NEUTON® devices to be recognized while isolating the glycol, allowing the primary cooling and heating loops to maintain the same properties.

ISOLATION VALVE PLACEMENT AROUND NEUTON®

While each designer will have different design standards for isolating devices in a hydronic system, it is prudent to install simple isolation valves (contractor provided) on each of the four connections serving each NEUTON®. In addition, it is beneficial to install (contractor provided) an additional isolation valve in the beam zone return piping connection to NEUTON®.

Isolation valves are installed as standard around the pump within NEUTON® to allow for quick and easy replacement of the pump should it ever need replacement. The downstream isolation valve helps to allow the beam loop to be isolated from NEUTON® components.

INSTALLATION OF MANUAL AIR VENT (BLEED POINT)

While every primary loop will include an automatic air separator, it is often prudent to install a manual air vent within the zone piping loop, preferably at system high point, as shown schematically within **FIGURE 13**. This will ensure that air can be easily purged from the loop during initial commissioning to ensure that the pump within NEUTON® functions properly.

CHILLER, BOILER AND ASSOCIATED PRIMARY PUMP CONTROL: 2 PIPE DESIGN

When designing a 2 pipe cooling and heating primary distribution system made possible by NEUTON®, it is critical that the water temperature be monitored and controlled after the last beam served by the loop (i.e. return to the chiller or boiler). With this design it is preferred to maintain the necessary fixed differential temperature across the chiller/boiler, using a variable capacity pump.

For example, the chilled water pump might be sized and controlled to provide 42°F chilled water to the primary water loop. Since a single pipe loop is allocated to the chilled water distribution system, NEUTON® pulls water from and injects some return water into the same loop. This causes the water temperature to gradually increase as it passes through the building. It is essential that the water serving the last beam on the loop be at least the design temperature selected for beam operation. This would typically be 56°F to 58°F.

Therefore, an effective strategy would be to operate the chiller to deliver water at 42°F water and then control the primary loop pump flow, as necessary, to maintain a differential temperature of 14° across the chiller. The 56°F water returned to the chiller maintains a 2° cushion relative to the 58°F beam supply water setpoint. A similar methodology would be used for the primary hot water loop produced by the boiler.

Since the CCBPM devices have the ability to increase flow beyond the original design quantity to facilitate boost mode, as an example, it is prudent to add a cushion of 15% to 20% to the calculated primary loop flow.

CHILLER, BOILER AND ASSOCIATED PRIMARY PUMP CONTROL: 4 PIPE DESIGN

When designing a 4 pipe cooling and heating primary distribution system with NEUTON® devices, the heating and cooling water loops are more conventional and effective design approaches are well understood. NEUTON® devices are served with essentially any conventional chilled or hot water and a traditional supply and return water loop are utilized.

With such systems, it is common to have the chiller and boilers sized to deliver a desired water temperature and the main circulation pumps are controlled to maintain a constant pressure toward the end of the supply distribution loop. A 3-way valve is generally installed near the end of each supply loop to allow at least 25% of the design flow, at a minimum, to be circulated through the supply and return loops at low load conditions.

As with the 2 pipe approach, it is prudent to add a cushion of 15% to 20% to the calculated primary loop flow to facilitate the boost mode capability of NEUTON®.

SECTION 12: SPECIFICATIONS

NEUTON CONTROLLED CHILLED BEAM PUMP MODULE

PART ONE - GENERAL

1.01 DESCRIPTION

A. Furnish controlled NEUTON® chilled beam pump modules (CCBPM) to optimize the performance of active and passive chilled beam system designs by facilitating the use of all beam passes for both heating and cooling. NEUTON® shall allow traditional hot and cold water loop temperatures to be utilized to create and control the moderate temperature water necessary to serve the chilled beam devices. It shall also incorporate DDC controls and logic for active condensation control and many other important benefits described within this specification.

B. Furnish and install chilled beam pump modules of the size and capacity shown on the equipment schedules.

C. Pumps, motorized valves, and digital controls shall be certified, and listed by a nationally recognized safety testing laboratory or agency, such as Underwriters Laboratories (U.L.), or Electrical Testing Laboratory (E.T.L.), or Canadian Standards Association (C.S.A.).

D. The pump module package shall be factory built and tested as a single unit, including the DDC controller and software necessary to ensure proper operation in active chilled beam applications. NEUTON® combines strategically selected components which include a variable speed, high efficiency ECM water pump, a hot water control valve, a chilled water control valve, chilled water outlet and hot water inlet flow restriction valves, a supply water temperature measurement device, a smart zone sensor and an associated DDC controller to optimize system performance parameters.

PART TWO – PRODUCT AND COMPONENTS

2.01 ASSEMBLY

A. Factory built module shall be leak tested using an electronic pressure decay leak detection instrument at 95 +/-2 PSIG with no greater than 5 ccm loss when compared to corresponding, no-leak master component.

B. The integral control panel shall be rated NEMA 3R and include the DDC control board, a 75 VA control transformer, 3 amp circuit breaker and all necessary terminal strips, including optional external start/stop capabilities. The panel shall require a single 230v/1PH/60hz connection.

2.02 PUMP

A. A single, high efficiency, speed controlled ECM pump powered by a permanent magnet rotor and integrated frequency converter is integrated within each NEUTON®. The ECM pump must be designed for condensing environments with all electronics separated from motor and with the motor being protected against condensed water by integral drain holes and double-coated wiring. The pump construction shall be designed to function effectively when processing water loops treated with glycol.

B. Pressure/Temperature plugs shall be installed immediately before and after the pump.

C. Union isolation valves shall be installed immediately before and after the pump to allow pump to be replaced with minimum system fluid loss.

2.03 PIPING CONNECTIONS

A. Swivel style union fittings shall be included on all piping connections to allow field connection of standard 1" NPT male fittings. Each union fitting shall consist of a brass male body, brass swivel nut, brass female body, and NBR seal. The swivel nut shall have 1-11 ½ NPSH female threads, and shall be retained by a stainless steel retaining ring, or by a feature integral to the male body. The female body shall have 1-11 1/2 NPSH male threads to assemble with the swivel nut, 1-11 ½ NPT female threads to allow field connection with a 1" NPT male fitting. The assembly shall include a feature to ensure a predetermined and consistent compression is applied to the seal of every union assembly.

B. Spring check valves shall be integrated into the swivel union fittings on the hot water supply and chilled water return fittings.

2.04 CHILLED AND HOT WATER CONTROL VALVES

A. The integral, two-way control valves serving the chilled and hot water to the chilled beam loop shall be characterized and specifically designed for variable flow with a Cv optimized for low pressure loss at the necessary range of control. An integrated proportional actuator shall be included with each control valve. The control valves shall be driven by a signal from the integral DDC control board supplied with each NEUTON®.

2.05 INTEGRAL DDC CONTROLLER AND LOGIC

A. Each NEUTON® shall include an Automatic Logic I/O Zone 583 controller. The controller shall support at least 5 digital outputs, 3 analog outputs and 8 universal inputs. Each controller shall have on-board communications capabilities to allow networking using the BACnet® protocol. The controller sends outputs to the variable speed pump, control valves and main building DDC system. The controller receives signals from the loop water temperature sensor, the zone space temperature sensor and zone relative humidity sensor.

Default set points integral to the software provided with each NEUTON® shall be changeable by using the keypad located on the face of each intelligent ZS series room temperature and relative humidity sensor, via the BACnet network or using an optional service keypad.

B. The chilled and hot water control valves shall be carefully modulated to meter in the amount of main loop water (hot or cold) needed to maintain the desired chilled beam loop supply water temperature set point. Ramp speeds shall be carefully controlled to avoid an over-shoot of the chilled water supply set point which could result in beam condensation.

C. Active condensation control - The zone dew point shall be calculated based upon the space temperature and relative humidity conditions then compared against the chilled beam loop supply water temperature set point. Active condensation control is achieved by monitoring the space dew point and automatically adjusting the beam supply water temperature, as needed, to ensure that it is maintained above the space dew point by a predetermined (and adjustable) offset.

D. As space conditions are achieved, the water flow passing through the beam loop shall be automatically reduced to respond to space load requirements to minimize pump energy, reduce operating cost and maximize occupant comfort.

E. Boost mode - If space conditions cannot be achieved with the available flow or water temperature during cooling mode, the water flow is automatically increased to achieve the desired space set point temperature. During heating mode, the beam water temperature is automatically increased to reach the room set point temperature before increasing flow.

F. Cooling/heating changeover algorithms shall be employed to avoid cycling between heating and cooling. A default (adjustable) dead band between the space heating and cooling set point temperatures shall be employed in conjunction with a time delay requirement at 0 percent demand before change-over can occur.

G. Unoccupied mode – Upon a signal from the BAS or optional CO_2 zone sensor to confirm an unoccupied space condition, NEUTON shall respond to a predetermined unoccupied zone set point by reducing water flow, cycling off the pump or modifying the chilled beam supply water temperature to minimize energy consumption.

2.06 ZONE AND WATER SENSORS

A. Each NEUTON® zone shall be provided with an intelligent temperature and relative humidity sensor (optional CO_2 available for occupancy sensing) which contains a LED display to show room conditions, includes an alarm notification icon and allows for modification of the project default set points via push buttons on the face of the sensor.

The sensor shall communicate with the pump module DDC control board via the ALC Rnet port and require only 4 wires.

B. Immersion type thermistors shall be installed immediately following pump discharge to accurately measure the beam loop supply water temperature. Strap-on thermistors or mechanical devices are not acceptable.

PART THREE - EXECUTION

3.01 INSTALLATION

A. Install chilled beam pump modules in accordance with the manufactures recommendations.

B. System checkout and start-up shall be as recommended by the system manufacturer.

3.02 START-UP

A. Upon completion of the installation, the installing contractor shall notify the pump module and chilled beam manufacturers, in writing, of his intent to start the units. The manufacturer shall provide two days of startup services by a factory authorized technician to demonstrate the proper startup procedure and provide training to ensure that NEUTON® devices are operating in accordance with the manufacturer's recommendations.

APPENDIX:

SECTION 1A: ENERGY BENEFITS OF CHILLED BEAMS COMBINED WITH NEUTON®

While there are numerous advantages associated with the application of chilled beams, including excellent air distribution, improved indoor air quality, reduced maintenance, the elimination of condensate management and low noise level, one of the major benefits is substantial energy savings.

Combining chilled beams with NEUTON® pump modules provides two primary sources of energy savings; substantially lower airflow requirements compared to conventional systems and reduced pump energy consumption made possible by NEUTON®. Chilled beams require only a fraction (typically 50% less) of the airflow used by more conventional systems such as heat pumps, fan coils or VAV systems at design.

The high efficiency, variable flow pumps incorporated within NEUTON® allow for a substantial reduction in the amount of energy required to pump the necessary water flow through the chilled beam distribution system. These savings result from both the low energy consumed by the high efficiency ECM motors designed into the CCPPM pumps and the benefits of variable flow compared to traditional on/off operation currently employed by most chilled beam systems.

EXAMPLE 1A:

To showcase the potential pump energy reduction, a baseline pump that is operated continuously to serve an on/off control valve cycled to provide the necessary zone cooling output is compared with a high efficiency, variable flow pump to deliver peak coil cooling power (24,000 BTUs), 80% of peak (19,200 BTUs) and 60% of peak (14,400 BTUs).

The baseline system is assumed to use a standard efficiency pump delivering 6 GPM of chilled water to the beam zone requiring 13 feet of head pressure. This pump operates continuously at peak cooling load with the zone water flow being cycled on and off by the control valve, as needed, to satisfy the space thermostat set point.

The NEUTON approach uses a high efficiency ECM pump operated to reduce flow down to 50% of maximum (6 GPM to 3 GPM), then cycled on and off once the cooling output at this minimum flow exceeds that needed to satisfy space conditions.

In both cases, the cooling delivered to the space by the primary air is the same, and is already subtracted from the space cooling load requirements for the purpose of this example. All water temperatures, room conditions and primary airflows are identical for each case.

As shown by **TABLE 4**, the ability to deliver variable zone water flow using a high efficiency motor results in substantial pump energy savings. This figure compares the baseline system with a high efficiency variable flow zone pump. As shown, a 67% reduction in pump energy consumption is recognized at peak load (full flow) conditions. More importantly, as the system operates at the part load conditions (80% and 60% of peak) the energy consumed by the ECM variable speed pump is reduced by 91%, requiring only 9% of that consumed by the baseline system.

FIGURE 16. Energy modeling completed for an actual High School project comparing three design approaches which highlights the significant fan and pump energy savings offered by the chilled beam and NEUTON combination

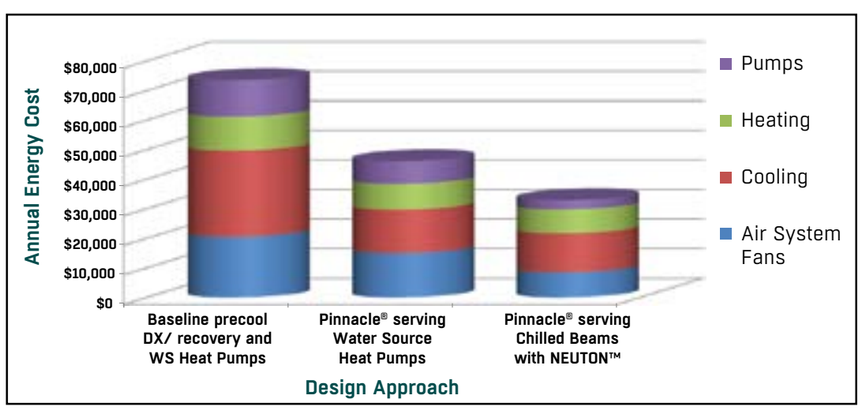

FIGURE 18 provides a graphical presentation of the data shown in **TABLE 4**. When at peak load conditions, both approaches deliver the same water flow and operate 100% of the time, and all energy savings come from the substantial increase in operating efficiency associated with the ECM pump. When at 80% load required, NEUTON ™ reduces the flow from 6 GPM provided 80% of the time by the conventional approach to 3 GPM provided continuously. Both provide the same net cooling output but due to the increased pump efficiency and much lower zone water system pressure loss, the energy is 91% less using NEUTON®. At the 60% load conditions, NEUTON® provides the 3 GPM only 75% of the time, further reducing the energy consumed by the zone pumps. When these pump energy savings are replicated over 100 plus zones, as would be the case for a typical high school, the overall energy savings that result are substantial.

FIGURE 18. Variable flow using high efficiency pump vs. conventional approach shown graphically

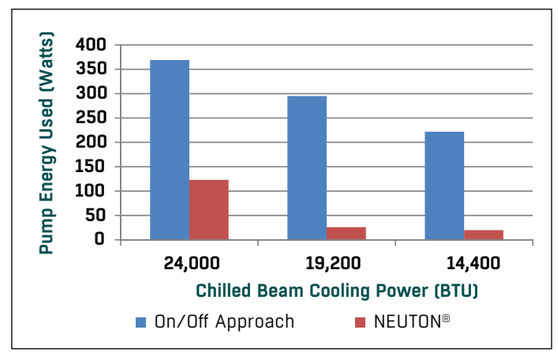

SECTION 2A: INSTALLATION COST BENEFITS PROVIDED BY NEUTON®

Employing the localized pumping and control capability offered by NEUTON® offers both installation and operational advantages over the current SOA chilled beam system design approach.

Addressing the installation complexity, cost and labor hours associated with a chilled beam installation is highly beneficial for two important reasons. First, chilled beam technology is relatively new in markets outside of northern Europe, and there is therefore a strong need to simplify the overall system design, including piping, beam selection and controls. Integrating the communications between the zone sensors, chilled beams, water distribution system and primary air handling systems is critical for both ease of installation and minimizing design, sizing and selection errors.

Secondly, the greatest single cost associated with a chilled beam cooling/heating system is associated with the distribution piping in the primary (building) and secondary (beam zone) cold/hot water loops, not the chilled beams or controls. Significantly reducing the size, cost and space requirements associated with the distribution piping allows the more efficient chilled

TABLE 4. Variable flow using high efficiency pump vs. conventional pump and on/off control valve

100% Load	Load Provided	GPM	Pump Head	Watts Consumed	Percentage On	Percentage Reduction
On/Off Approach	24,000	6	13 ft.	369	100%	-
NEUTON®	24,000	6	13 ft.	123	100%	**67%**
80% Load	Load Provided	GPM	Pump Head	Watts Consumed	Percentage On	Percentage Reduction
On/Off Approach	19,200	6	13 ft.	295	80%	-
NEUTON®	19,200	3	5.5 ft.	26	100%	**91%**
60% Load	Load Provided	GPM	Pump Head	Watts Consumed	Percentage On	Percentage Reduction
On/Off Approach	14,400	6	14 ft.	222	60%	-
NEUTON®	14,400	3	5.5 ft.	20	75%	**91%**

beam systems to be installed at a cost similar to the less efficient conventional HVAC system approaches.

INSTALLATION ADVANTAGES FOR A 4 PIPE SYSTEM: (PRIMARY WATER LOOPS ONLY)

When integrating NEUTON® into a traditional 4 pipe primary water distribution system layout, significant installation advantages can be recognized. These include substantial first cost reductions in the size of the pipe required for the distribution system, smaller heating and cooling primary pump size and associated energy use, enhanced chiller efficiency associated with a greater water temperature differential between supply and return and the ability to use a two pipe chilled beam.

The ability to use a two pipe beam coil (same passes for heating and cooling), significantly increases the heating or cooling output from a beam of a given length when compared to a traditional 4 pipe beam coil, which uses some passes for heating and others for cooling. This two pipe beam needs fewer connections and eliminates a significant quantity of piping (approximately one half) that would otherwise be needed within each zone. Most importantly, it integrates the control, wiring, control valves and other system components into one prefabricated unit which greatly simplifies installation while minimizing the change of errors and performance problems.

IMPACT ON PIPE DIAMETER, PUMP SIZE & LOOP INSTALLATION COST

As previously discussed in section 4, traditional chilled beam system designs shown as **FIGURES 5 and 6** require that the water temperature delivered through the chilled and hot water loops be the same temperature as required for the chilled beams to operate properly. As previously discussed, to avoid condensation during the cooling season and the stratification of heat in the zone during the heating season, these water temperatures are typically in the range of 58° (cooling) and 105° (heating).

Typical return water temperatures for the chilled beam system during cooling with the 58° supply water temperature would commonly be in the range of 64°, depending upon a number of system design parameters. During the heating mode, the 105° water can be assumed to leave the beams at approximately 96° when using a supply water flow rate that is approximately half that used for cooling.

As a result, the cooling delta T (temperature differential) would in this case be 6° while the heating delta T would be 9°. If the amount of cooling or heating capacity needed is known for a series of zones, the amount of flow through the heating and cooling loops can be easily estimated. Knowing the water flow rates and approximate loop length allows for an analysis of both pipe size required and pump energy.

EXAMPLE 2A: TRADITIONAL 4 PIPE CHILLED/HEATING BEAM LOOP ANALYSIS (FIGURES 5 AND 6)

If we assume for example a school wing consisting of 14 classrooms each requiring a 2 ton cooling load (24,000 BTUs/hr.) to be handled by the coil power of the chilled beams (cooling provided by the primary air has been deducted from the space load to determine the coil capacity needed). We will also assume that the pipe length required to reach all rooms is 400 feet each for the supply and return water loops. For heating, the load for each room can be assumed to be 10,000 BTUs/hr. As previously discussed, the conventional approach to chilled beam designs is assumed to use a cooling delta T of 6° and a heating delta T of 9°.

With this information, we can easily estimate the necessary cooling water flow rate, pipe size and pump energy required using the following formulas along with industry accepted pipe sizing tables: (**NOTE:** calculations to support the examples in this section are available upon request and have been omitted here, by design, to conserve space)

$$\textbf{Flow}_{(GPM)} = Q_{(BTU/Hr)} / (500 * \textbf{Delta T}_{(supply - return\ water\ temperature)})$$

and:

$$\textbf{Pump Energy}_{(Hp)} = \textbf{Head}_{(ft\ of\ water)} * \textbf{Flow}_{(gallons/min)} / (3960 * \textbf{Pump efficiency})$$

Solving for these equations confirms that a chilled water flow of 112 gallons per minute (GPM) would be required to deliver the required cooling load and a 3.0" diameter primary pipe network would typically be used. With fittings, the loss for this primary loop (not including the beams, zone piping or control valves) would require approximately 21 feet of head.

To accommodate the heating load a hot water flow of 31 GPM would be delivered through a 2.0" diameter primary pipe network. With fittings, the loss for this primary loop (not including the beams, zone piping or control valves) would require approximately 16 feet of head.

Assuming a 60% efficient pump, the cooling loop would use a 1.1 horsepower (hp) pump while the hot water loop would need .2 hp.

EXAMPLE 2B: NEUTON WITH 4 PIPE LOOP ANALYSIS (FIGURE 7)

By employing NEUTON®, the 58° supply water temperature required by the beams can be created by using the same 45° F water supplied to the primary air handling unit (DOAS) delivering the primary air to the chilled beams. This is a major advantage over the SOA system since only one chilled water loop is needed, not two separate chilled water loops – one for the beams and one for the DOAS. Likewise, much warmer 140° F water can be used for heating so that a common building hot water loop can be used for the beams and the DOAS as well.

Since NEUTON® will use these new water temperatures to create the same 58° F (cooling) and 105° F (heating) the return water temperatures from the beams will be the same. As a result, the cooling loop delta T (temperature differential) would therefore increase to 19° (64 – 45) while the heating loop delta T would increase to 44° (140 – 96). As a result, a very significant reduction in flow, pipe size, and pump power can be recognized.

To accommodate the cooling load, a chilled water flow of 35 GPM is required and will be distributed through a 2.0" diameter pipe loop. With fittings, the loss for this primary loop is estimated at approximately 15 feet of head.

To accommodate the necessary hot water flow of 6.5 GPM, a 1.0" pipe network can be used. With fittings, the loss for this primary loop is estimated to be approximately 16 feet of head.

Assuming a 60% efficient pump, the cooling loop would now use only .2 hp pump (15 ft * 35 GPM /(3960 * .6)) while the hot water loop would need only .04 hp (16 ft * 6.5 GPM /(3960 * .6)).

EXAMPLE SUMMARY FOR 2A AND 2B: 4 PIPE INSTALLATION COMPARISON

The results of this example comparing the 4 pipe system approach with and without the use of NEUTON® are summarized by **TABLE 5**. The advantages provided are clear with very significant reductions in water flow requirements, pump energy, pipe diameter and installation cost. The cost estimates reflect data provided by the R.S Means Mechanical Cost Data Manual (2009 version). Additional cost savings associated with insulation, pump cost and electrical are not included.

INSTALLATION ADVANTAGES WITH A 2 PIPE SYSTEM: PRIMARY WATER LOOPS ONLY

When integrating NEUTON® into a novel 2 pipe system layout, additional installation and cost advantages can be recognized. This approach not only reduces the pipe size during cooling and heating as before, but also cuts the length of pipe in half since, as previously discussed, NEUTON® pulls water from and delivers it back to the same pipe loop (see figure 8).

This 2 pipe system approach still allows for the use of two pipe beams (same passes for heating and cooling), and provides all of the other benefits previously described for NEUTON® when combined with the 4 pipe approach analyzed in the previous section.

IMPACT ON PIPE DIAMETER, PUMP SIZE AND LOOP INSTALLATION COST

We can now compare the traditional 4 pipe approach examined in example 8A and compare it with the novel 2 pipe layout combined with NEUTON®. As explained in section 5 and shown as figure 8, this approach pulls cold water from the single cooling loop (for example) and discharges some quantity of return water back into the same loop. As a result, there is a consistent change in the supply chilled water temperature as it passes through the building. The change is a function of the load on the building. To ensure that there is adequate cooling power left in this loop for the chilled beams serving the last zones served by the loop, the water temperature at the end of the loop is controlled by varying the inlet water temperature and/or flow. The same approach is used for the single heating water loop employed.

Due to the need to control these end of the loop temperatures, the delta temperature between the beginning of the loop water and the end of the loop water is not as great as possible with the previous 4 pipe example utilizing NEUTON®, but the benefit here is a significant reduction in linear feet of pipe, fittings and installation required.

Example 2c is similar to examples 8a and 8b but reflects the 2 pipe approach. The same number of classrooms and corresponding loads are used. Now only 200 linear feet of pipe is required due to the one pipe loop for cooling and heating. The end of the loop temperature for cooling is assumed to be 55° F for cooling and 120° F for heating.

EXAMPLE 2C: NEUTON® WITH 2 PIPE LOOP VS. TRADITIONAL 4 PIPE LOOP ANALYSIS

Once again, by employing NEUTON®, the 58° supply water temperature required by the beams can be created by using the same 45° F water supplied to the primary air handling unit (DOAS) providing air to the chilled beams. Likewise, much warmer 140° F water can be used for heating so that a common building hot water loop can be used for the beams and the DOAS as well.

Since NEUTON® will use these new water temperatures to create the same 58° F (cooling) and 105° F (heating) the return water temperatures from loops will reflect the end of the loop temperatures (55° F and 120° F). As a result, the cooling loop delta T (temperature differential) would therefore be 10° (55 – 45) while the heating loop delta T would be 20° (140 – 120).

To accommodate the cooling load with this approach, a chilled water flow rate of 67 GPM and only 200 feet of 2.0" diameter pipe is required. With fittings, the loss for this primary loop is estimated to be approximately 21 feet of head.

For heating, a hot water flow rate of 14 GPM is required, through 200 feet of 1.25" diameter pipe. With fittings, the loss for this primary heating loop is approximately 10 feet of head.

Assuming a 60% efficient pump, the cooling loop would now use only **.6** hp pump (21 ft * 67 GPM /(3960 * .6)) while the hot water loop would need .06 hp (10 ft * 14 GPM /(3960 * .6)).

EXAMPLE SUMMARY EXAMPLE 2C: 4 PIPE INSTALLATION COMPARISON

The results of example 8c, comparing the traditional 4 pipe system approach and NEUTON® combined with the 2 pipe approach are summarized by **TABLE 6**. The advantages provided are clear resulting in significant reductions in water flow requirements, pump energy, pipe diameter and installation cost.

As supported by **EXAMPLES 2A, 2B** and **2c** and summarized by **TABLES 5 AND 6**, whether a 4 pipe distribution is used with NEUTON® or the novel 2 pipe approach, significant benefits are recognized. The benefits include lower flow rates, lower pump energy, smaller pipe size and much lower installation cost.

Thus far, these examples have only looked at the energy use and cost associated with the primary distribution water loop piping and installation external to the individual zones. Internal zone installation costs are evaluated by the next example.

INSTALLATION ADVANTAGES WITH NEUTON: INTERNAL TO EACH ZONE

The previous sections identified the many performance and cost advantages offered by NEUTON® integration to the primary water distribution loops that are external to the individual zones. This example looks at the installation advantages provided for work completed within the individual zones.

NEUTON® allows all passes of the chilled beam coil to be used for both heating and cooling. This offers several important benefits. First, it allows more cooling and heating output from the beam. When comparing a 4 pipe beam using say two passes for heating and 6 passes for cooling with a 2 pipe beam of similar length but using all passes for both cooling and heating, approximately 13% more cooling output and approximately 30% more heating output is provided by the 2 pipe beam.

Often this increased capacity will allow for a shorter 2 pipe beam to be used to process the required cooling or heating load, significantly reducing the cost of the beams needed. Alternatively, the same length beam can be operated with lower water flows to deliver the same cooling and heating output.

Secondly, the water distribution piping internal to the zone is dramatically simplified. With the traditional approach a 4 pipe chilled beam coil is required. As a result, four pipes are needed to distribute both chilled and hot water to and from each beam. With NEUTON®, only one set of water distribution piping is needed within the zone.

The most significant advantage of NEUTON® is that

TABLE 5. Summary table showing the installation advantage offered by NEUTON® when applied with a 4 pipe system approach compared to the SOA system.

Summary of Performance/Cost Analysis for 4 Pipe Approach: Current State of the Art vs. NEUTON®

		Traditional 4 Pipe	NEUTON 4 Pipe	Percent Reduction with NEUTON®
Flow Required	Cooling Loop	112 GPM	35 GPM	69%
	Heating Loop	31 GPM	6.5 GPM	79%
Pump Power	Cooling Loop	1.1 HP	.2 HP	81%
	Heating Loop	.2 HP	.04 HP	80%
Pipe Diameter	Cooling Loop	3"	2"	33%
	Heating Loop	2"	1"	50%
Estimated Installation Cost	Cooling Loop	$30,400	$16,600	45%
	Heating Loop	$16,600	$7,240	56%
	Secondary Loop (1) Hot and Cold	$18,000	$0	100%
Total Installation Cost		**$65,000**	**$23,840**	**$41,160**

Note 1: Estimated cost associated with creating a separate secondary water loop to serve the chilled beams (cooling and heating). This would include plate frame heat exchanger, piping, valves and installation (see figure 5 and 6 vs figure 7)

TABLE 6. Summary table showing the installation advantage offered by NEUTON® when applied with a 2 pipe system approach compared to the SOA system using 4 pipe arrangements.

Summary of Performance/Cost Analysis for 2 Pipe Approach: Current State of the Art vs. NEUTON® 2 Pipe Approach

		Traditional 4 Pipe	NEUTON® 2 Pipe	Percent Reduction with 2 pipe NEUTON®
Flow Required	Cooling Loop	112 GPM	67 GPM	40%
	Heating Loop	31 GPM	14 GPM	55%
Pump Power	Cooling Loop	1.1 HP	.6 HP	45%
	Heating Loop	.2 HP	.06 HP	70%
Pipe Diameter	Cooling Loop	3"	2"	33%
	Heating Loop	2"	1.25"	38%
Estimated Installation Cost	Cooling Loop	$30,400	$8,300	73%
	Heating Loop	$16,600	$2,150	87%
	Secondary Loop (1) Hot and Cold	$18,000	$0	100%
Total Installation Cost		**$65,000**	**$10,450**	**$54,550**

Note 1: Estimated cost associated with creating a separate secondary water loop to serve the chilled beams (cooling and heating). This would include plate frame heat exchanger, piping, valves and installation (see figure 5 and 6 vs figure 7)

the device greatly simplifies the installation process since all key components can be preinstalled as one unit, prewired and pretested rather than having this work done at the site. Due to the integration of the variable speed pumps, on-board control logic and flow measurement methodology, balancing the system is greatly simplified, especially when the local pump can be instantly modulated to provide the pressure needed within the individual zone rather than increasing the pressure of the entire main pump loop to all zones as required by the SOA approach.

EXAMPLE 2D: COMPARISON OF ZONE INSTALLATION COSTS BETWEEN NEUTON® WITH 2 PIPE COILS VS. SOA APPROACH REQUIRING 4 PIPE COILS

For this example, we have assumed that each zone needs 2 tons of sensible cooling (24,000 BTU/hr) and 10,000 BTU/hr. of heating that is to be handled by the coil power of the beams (rest of the load handled by the primary air heating or cooling). To make a conservative comparison, we will assume that each zone contains 6 beams having a length of 8' each, independent of the zone distribution system chosen (the beams using all passes for both heating and cooling would likely require only 5 beams).

To satisfy demand, the 4 pipe beams will require approximately 1.33 gallons/min each of 58° F chilled water and .4 gallon/min each of 105° hot water. The two pipe beams (all passes used for both heating and cooling) can accomplish the same work with approximately 1 gallon/min of 58° F water and .25 gallon/min of 105° hot water. This means that the 4 pipe coils will need 9 gallons/min of chilled water and 6 gallons/min of hot water while the 2 pipe coils will only need 6 gallons/min and 3 gallons/minute respectively.

The zone distribution piping is assumed to be completed in flexible 1" diameter cross-linked polyethylene tubing (i.e. trade name PEX) with quick connection capabilities. As a result, the water pressure losses within the zone accounting for the control valves, balancing valves, pipe, fittings and chilled beams can be estimated. To serve the beams, the 4 pipe system will need 50 linear feet of both cooling and heating pipe. The 2 pipe chilled beams will need only 50 linear feet of pipe in total.

The cooling and heating water flows associated with the 4 pipe chilled beams, pipe, fittings and other system components result in a head pressure loss of 15 feet of water and 6 feet of water respectively. For the 2 pipe system, operating at the slightly lesser flows but accounting for the added pressure required by the CCBPM internal losses, the total head pressure losses are calculated to be 13 and 4 feet of water for cooling and heating.

Combining the results of **TABLES 5 OR 6** with the results of **TABLE 7** provides a clear confirmation of the installation cost and pump energy benefits associated with the use of NEUTON®. For example, comparing the estimated costs of installing the chilled beams in the current SOA 4 pipe configuration with that of the NEUTON® approach, considering both the main loop piping costs and all zone installation costs (i.e. combining **TABLES 5 and 6**, NEUTON® approach actually reduces the installed cost by an estimated $45,480. This represents a very significant cost savings equating to approximately $3/square foot of the conditioned zones used for this analysis.

TABLE 8 combines the results from **TABLES 5, 6, and 7** to show the magnitude of expected project first cost savings when incorporating NEUTON® into a chilled/heating beam design. As shown, NEUTON® designs reduced the cost of installation associated with the chilled beams, piping, controls and other interior components by 24% and 34% respectively for the 4 pipe and 2 pipe primary loop approaches respectively. This translated into cost savings on a square foot basis of $2.1 and $3.0 for the two approaches for the sample project investigated.

In addition to providing substantial first cost savings, the NEUTON® approach provides advanced DDC controls, active condensation prevention, significant energy savings and numerous design advantages previously discussed.

TABLE 7: Summary table showing the installation advantage within the 14 zones offered by NEUTON® when applied with 2 pipe coils in the chilled beams compared to the SOA system using 4 pipe coils. NEUTON® cost included full DDC controls capabilities while the SOA is assumed to use only a wall thermostat.

Summary of Zone Performance/Cost Analysis: Current State of the Art 4 Pipe Approach vs. NEUTON® 2 Pipe Approach

		SOA 4 Pipe Coils	NEUTON 2 Pipe Coils	Percent Reduction with 2 NEUTON® pump modules
Flow Required	Cooling Loop	112 GPM	84 GPM	25%
	Heating Loop	31 GPM	21 GPM	32%
Pump Power	Cooling Loop	.75 HP	1.4 - 0.4 HP(1)	47%(2)
	Heating Loop	.08 HP	0.11 - 0.03 HP(1)	63%(2)
Chilled Beam Cost(3)	4 Pipe - 8' beam	$49,890		12%
	2 Pipe - 8' beam		$43,890	
Estimated(4) Installation Cost	Piping Cost	$8,400	$4,200	50%
	Valves, controllers, flow measurement, electrical, etc.	$9,940	$3,220	-161%
	NEUTON® Pump Modules		$25,900	
Total Installation Cost		**$68,230**	**$77,300**	**($9,070)**

Note 1: Reflects the difference between a low efficiency and high efficiency ECM pump
Note 2: Comparison with the preferred high efficiency pump used for NEUTON®
Note 3: Reflects cost difference between a two pipe and 4 pipe coil in the chilled beams (required by SOA approach)
Note 4: Pipe cost and component installation cost estimates from R.S. Means (2009)

TABLE 8. Summary table showing the potential for first cost savings associated with NEUTON® for the 4 pipe and 2 pipe approaches compared to a traditional chilled beam system design

Summary of Zone Performance/Cost Analysis: Current State of the Art 4 Pipe Approach vs. NEUTON® and 2 Pipe Approach

Estimated Installed Cost	SOA 4 Pipe Coils	NEUTON 4 Pipe Coils	NEUTON 2 Pipe Coils
Primary Loop	$65,000	$23,840	$10,450
Zone Loops, Beams, Controls, NEUTON	$68,230	$77,300	$77,300
Total Installed Cost (1)	**$133,230**	**$101,140**	**$87,750**
Reduction from SOA Baseline (percentage)	0%	24%	34%
Reduction from SOA Baseline ($/sq.ft.)	$0 / sq.ft.	$2.10 / sq.ft.	$3.00 / sq.ft.

Note 1: Includes all installed components except ductwork and Pinnacle® DOAS equipment and installation

WWW.SEMCOHVAC.COM / NEUTON® / 20221808

FläktGroup® SEMCO® delivers smart, energy-efficient, air-quality solutions to support every building application. We offer our customers innovative technologies, high-quality products and outstanding performance supported by more than fifty years of accumulated industry experience. The broadest offering on the market and a strong market presence in 65 countries worldwide guarantees that we are always by your side, ready to deliver: Excellence in Solutions.

FläktGroup® SEMCO®

Corporate Headquarters
1800 East Pointe Drive
Columbia, Missouri 65201 USA

573.443.1481

sales.semco@flaktgroup.com

To learn more about FläktGroup® SEMCO® offerings and to contact your nearest representative please visit

www.semcohvac.com

© Copyright 2022 SEMCO LLC. All Rights Reserved. SEMCO embraces a policy of continuous development and improvement, the right is reserved to supply products which may differ from those illustrated and described in this publication. Specifications are subject to change without further notice. Any FläktGroup SEMCO purchase is subject to FläktGroup SEMCO standard terms and conditions. Certified dimensions will be supplied upon request on receipt of order. SEMCO is a registered Trademark of SEMCO LLC. Other trademarks and logos in this publication may be property of SEMCO, LLC, its subsidiaries or any of its related companies and/or other organizations or individuals. Neuton and Pinnacle are trademarks of SEMCO LLC. BACnet is a registered trademark of the American Society of Heating, Refrigerating and Air Conditioning Engineers. U.S. patented technology: 10,690,638.