FläktGroup®

SEMCO®

PINNACLE® SERIES

PRIMARY VENTILATION SYSTEM

OWNER'S MANUAL

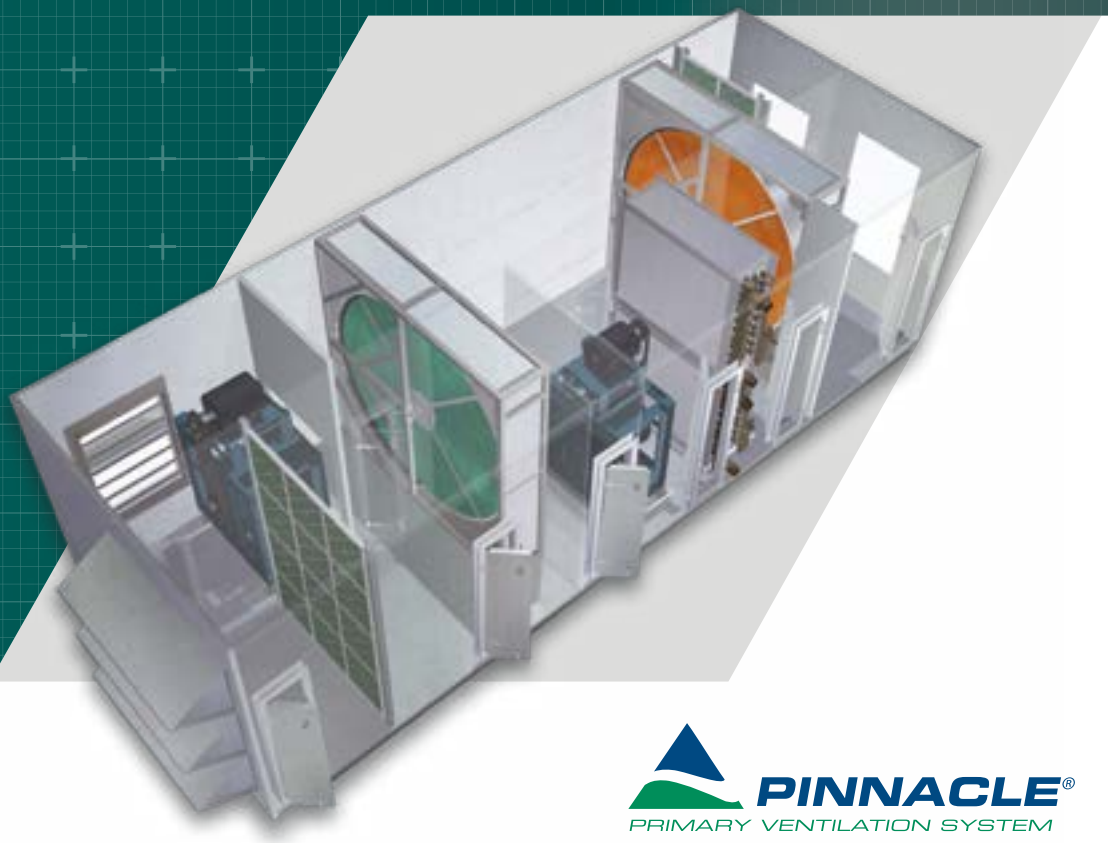

PINNACLE®

PRIMARY VENTILATION SYSTEM

TABLE OF CONTENTS

Introduction 1
The Pinnacle® System 1
System Installation 2
- Lifting 2
- Inspection 2
- Receiving 2
- Storage 3
- Installation 3
- Mounting Details, Curb Support 7
- Mounting Details, Grid or Pad Support 8

Energy Recovery Wheel 9
Seals and Purge Adjustment 9
EC Fans 10
Plenum Fans 10
Dampers 12
Coils 13
Digital Scroll Compressor 13
Duct Heater 13
Humidifier 14
Air Filters 14
Troubleshooting 16
Maintenance 18
- Energy Recovery Wheel 19
- Plenum Fans 19
- EC Fans 20
- Dampers 20
- Coils 20

© SEMCO 1995-2025. All rights reserved.

The information in this owner's manual is furnished for informational use only, is subject to change without notice, and should not be construed as a commitment by SEMCO LLC. SEMCO LLC assumes no responsibility for any errors that may appear in this owner's manual.

No part of this publication may be reproduced, stored in a retrieval system or transmitted, in any form or by any means, electronic, mechanical, recording, or otherwise, without the prior written permission of SEMCO LLC.

© SEMCO LLC 2025 All Rights Reserved. SEMCO and the SEMCO logo are registered Trademarks of SEMCO LLC.

This appliance is not intended for use by persons (including children) with reduced physical, sensory, or mental capabilities, or lack of experience and knowledge, unless they have been given supervision or instruction concerning use of the appliance by a person responsible for their safety.

Children should be supervised to ensure that they do not play with the appliance.

INTRODUCTION

This manual describes how to erect, store, clean and maintain a FläktGroup® SEMCO® Pinnacle® Series Primary Ventilation System (PVS).

Each section provides information to guide the installation and maintenance of all components that may be included in the system, except for the True 3Å® energy recovery wheel that is detailed in a separate manual. However, some individuals may desire more information about one or more items of equipment installed in the system. If so, consult the manufacturer's manual that accompanies the equipment or is included with our submittal.

It should also be noted that a section or sections of this manual might not apply to your system; for example, it may not include a humidifier or an evaporative cooler. The manual has been prepared to cover the basic system as well all-optional components, that may be included in a Pinnacle® series primary ventilation system.

THE PINNACLE® SYSTEM

The Pinnacle® system economically provides high quantities of outdoor air and controls indoor humidity levels at the same time. It accomplishes this by dehumidifying the supply air to very low dew points in an energy efficient manner, without the use of a regeneration heating source. It continuously delivers the outdoor air to the occupied space while simultaneously controlling humidity levels at the conditions recommended by ASHRAE, even at part-load conditions. The Pinnacle® system is capable of providing a very high degree of latent cooling using only a minimum amount of conventional cooling input.

The Pinnacle approach utilizes the strengths of passive total energy recovery, conventional cooling technology and a new class of desiccant product, the passive dehumidification wheel, to provide the best possible outdoor air preconditioning system.

The system is comprised of a supply fan, an exhaust fan, a total energy wheel, a cooling coil and a passive dehumidification wheel. The total energy wheel is used to precondition fresh air using the exhausted building air. The cooling coil and passive dehumidification wheel then work in concert to further treat this fresh air stream to produce room temperature air at a much reduced humidity level.

SYSTEM INSTALLATION

How to handle the system upon delivery to the project site.

LIFTING

To off load each of the system's modules, lift only with the lugs located at the base of each module (See **FIGURE 1**). Do NOT lift with a forklift. Spreader bars must be used to hoist sections to avoid damaging the enclosure (See **FIGURE 2**).

FIGURE 1. Lift modules only with lugs located at the base of each module. Do not use a forklift. **NOTE:** Chain hoists used to level unit.

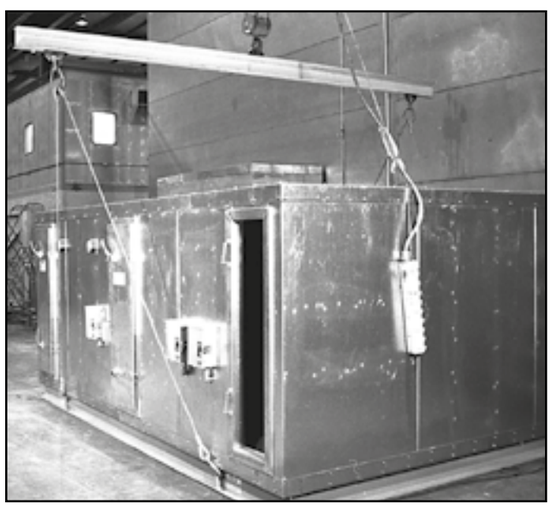

FIGURE 2. Spreader bars must be used for hoisting modules to avoid damaging the enclosure.

Chokers need to be adjustable so that the unit is level when it is picked up and, more importantly, set down. **WHEN SETTING THE UNIT DOWN, A LEVELING BLOCK MUST BE PLACED UNDERNEATH EACH LIFTING POINT TO PREVENT DEFLECTION.** Setting the unit down on one corner could cause the unit to rack. Lever chain pullers are useful for this purpose.

INSPECTION

In addition to inspecting modules and equipment visually for possible shipping damage, be sure to consult "Inspection" instructions described later in this manual for each optional component.

RECEIVING

1) A packing list is supplied with each shipped system and can be found inside the electric box. The list should be compared with arriving shipments to ensure that all modules and equipment have been delivered in good condition. Visible damage should be noted on the trucker's bill of lading when receiving the unit.

2) Prior to leaving the plant, each system has been tested. You will find the quality assurance label on the inside of the electric box cover along with the wiring schematic.

3) If the modules are to be stored for more than three days prior to installation, a visual inspection of all equipment is necessary. Report missing or damaged equipment to FläktGroup SEMCO immediately. Freight claims are difficult to justify long after delivery has been completed. If the modules are to be stored, see the following section.

4) Modules accumulate dust, dirt and corrosive matter (like salt) during shipment to the installation site on open trailers, and are exposed to still more grime on the construction site. Therefore, it is imperative that the exterior of each module be washed down with soap and water soon after it arrives. Abrasives and solvents should not be used without first consulting FläktGroup SEMCO.

5) The interior of each module should also be cleaned thoroughly and all equipment should be lubricated before storing or beginning operation. See other sections for specific lubrication instructions.

STORAGE

If the system, or parts thereof, must be stored before installation, indoor storage is preferred. If not possible, modules should be located on a hard surface with adequate drainage so that water cannot accumulate under the modules. A solid paved surface would be appropriate. Modules must be stored on blocks or timbers that raise modules at least four inches above the ground. **A BLOCK MUST BE PLACED UNDERNEATH EACH LIFTING POINT TO PREVENT DEFLECTION.**

If stored indoors, modules should be protected from damage. If stored outdoors, modules must be covered with well-anchored canvas tarps. Heavy-mil plastic tarps should be used with caution as they can trap moisture against the unit.

MOISTURE MUST NOT BE ALLOWED TO ENTER THE MODULES. Whether stored indoors or outdoors, all openings must be closed tightly and piping penetrations must be capped. However, drain connections should be left open.

As noted previously, modules must be washed to remove corrosive materials and dirt before storage.

During the storage period, modules should be opened and inspected every 30 days. Fans must be inspected and rotated a few times by hand and stopped in a position other than the original position. Fans should also be lubricated as prescribed on the fan label.

If moisture is found in any module, it must be removed immediately. The source of the moisture must be determined and corrected immediately.

During storage, modules should not be stacked on top of each other.

Boxes containing bolts, gaskets and other items should be stored inside the modules. They can be found in a box located in the supply air compartment along with a packing list.

INSTALLATION

1) Prepare the installation site by cleaning it of all debris. Supports, which the modules will be installed on, should be level. The unit base is designed either for mounting on a concrete pad or onto a roof curb (See **PAGES 8** and **9**).

2) Consult drawings and submittal provided to determine the location of each module. Plan to lift modules in the order required for your Installation and within the limitations of your lifting equipment (see **"LIFTING"** on **PAGE 2**).

3) Adjoining ends of modules are covered with plywood and/or plastic sheets during transport. This must be removed prior to hoisting the modules in place. (See **FIGURE 3**).

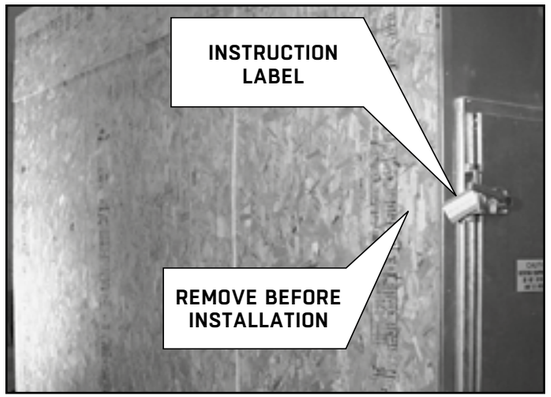

FIGURE 3. Module sides which are to be joined at time of installation are covered with plywood and/or plastic sheets for protection during transport. Throughout the unit you will find instruction labels indicating which steps **MUST** be performed for proper installation.

4) Remove shipping restraints at roof joint (not shown).

5) Hoist the first module in place. Spreader bars and hoisting lugs must be used on each module for hoisting. Do not use forklifts. (See **FIGURES 1** and **2** on **PAGE 2**).

6) After positioning the module correctly, install continuous gasket material on field joint flange as indicated in **FIGURE 4.**

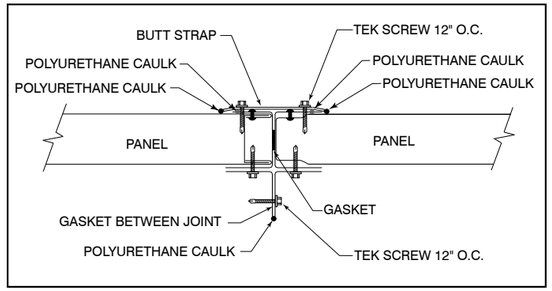

FIGURE 4. Detail of field joint located on side.

7) Hoist the second module by its lifting lugs (continue to use spreader bars), and position it close to the first module. After aligning with the first module, move the second module against the first module.

8) Insert bolts that join the first two modules in the unit base and tighten. The large bolts in the unit base may be used to help pull the two modules against each other. Do not use any of the internal field joints to pull the units together (See **FIGURE 5**).

FIGURE 5. Field joint located on base. Use only these bolts to pull the modules together.

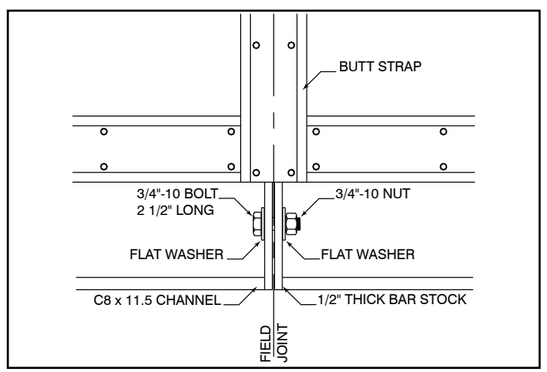

FIGURE 6. Detailed drawing of field joint.

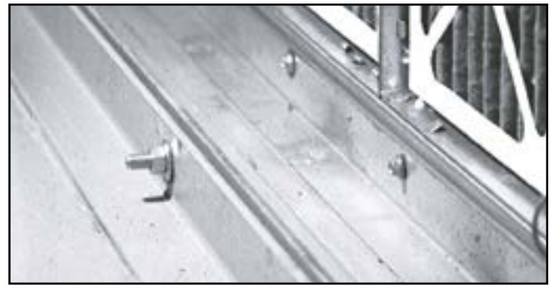

FIGURE 7. Field joint located at floor.

9) Verify that the two modules are straight, square and level. Use metal shims if necessary to level.

10) Hoist and set succeeding modules as described in **STEPS 5-7**.

11) If installation requires that some modules be placed on top of base or bottom modules, install continuous gaskets between upper and lower modules as indicated in drawings and submittals.

12) Do not torque connecting bolts until all upper modules are installed. Experience suggests installing bolts in the following manner. First, attach bolts that join the centers of connecting modules. Then work outward from the center and attach remaining bolts, which will assure proper alignment. Bolts should only be tightened by hand until all upper modules are in place. Then they should be torqued to 25 ft-lbs.

13) Complete field joint assembly by applying polyurethane caulk to the exterior of the joint and then cover with butt strap as shown in **FIGURE 4**.

14) Modules produced for outdoor locations are manufactured with a galvanized steel standing seam roof. A section of roof is shipped loose for field installation at each field job.

15) Apply polyurethane caulk along the underside of the roof butt strap and center over the joint between the two modules. Using #12 TEK screws at approximately 12" centers, screw the butt strap to the roof. (See **FIGURE 8**)

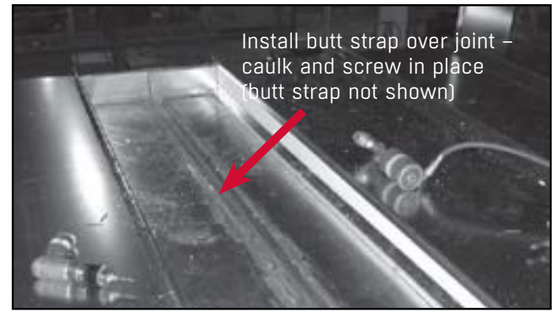

FIGURE 8.

16) Apply caulk at high and low point of roof and add first foam panel. (See **FIGURE 9**)

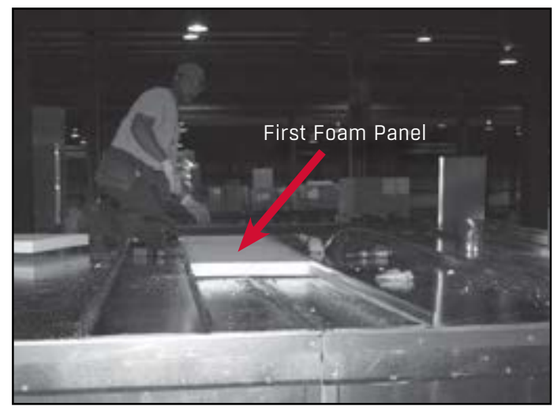

FIGURE 9.

17) Apply second foam panel. See **FIGURE 10** for caulking instructions.

FIGURE 10.

18) Insert one edge of roof panel as shown and rotate into place (See **FIGURE 11**).

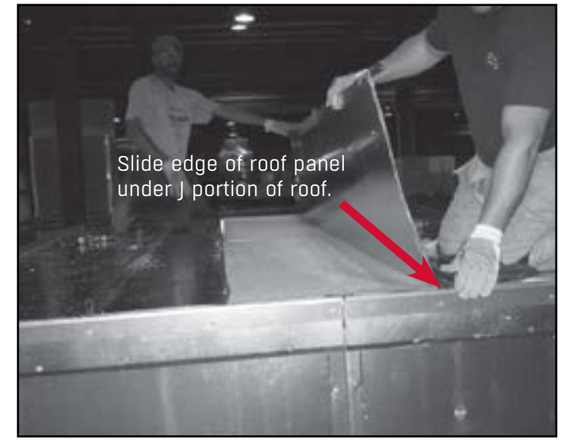

FIGURE 11.

19) Crimp roof lips with crimping tool. (See **FIGURE 12**)

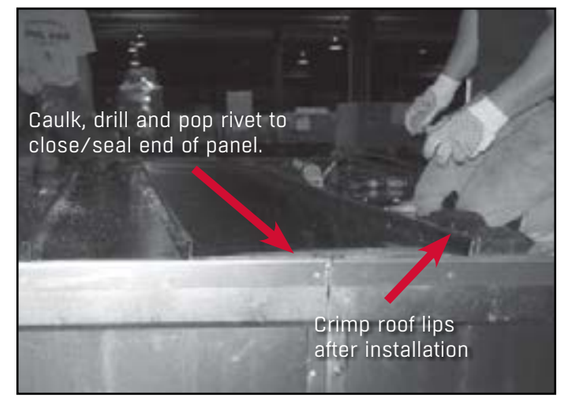

FIGURE 12.

20) Finish high side of roof with rain cap. Screw in place similar to factory cap. (See **FIGURE 13**)

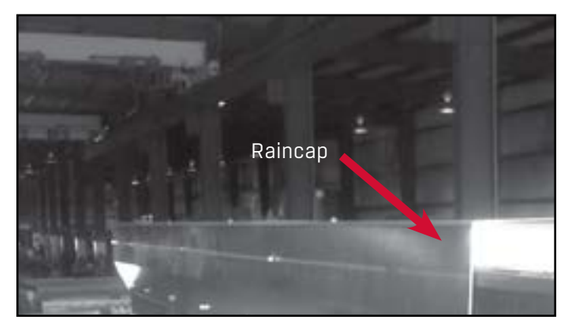

FIGURE 13.

21) Holes for conduit, piping, etc., are normally precut in module panels at the factory. However, if it is necessary to change the location of a hole or to cut a new one, these guidelines must be observed:

- Every hole represents a potential leak. Avoid adding new holes to the enclosure if possible.
- If it is necessary to add a new hole or to move the location of a hole already in the unit, select a location as close as possible to hookup inside the enclosure.
- Cut holes through panels. **DO NOT** cut through structural members.

22) Removable panels are furnished for large items such as coils. Adequate service space in front of these panels should be provided in case the item or items will have to be removed at some future time (See **FIGURE 14**).

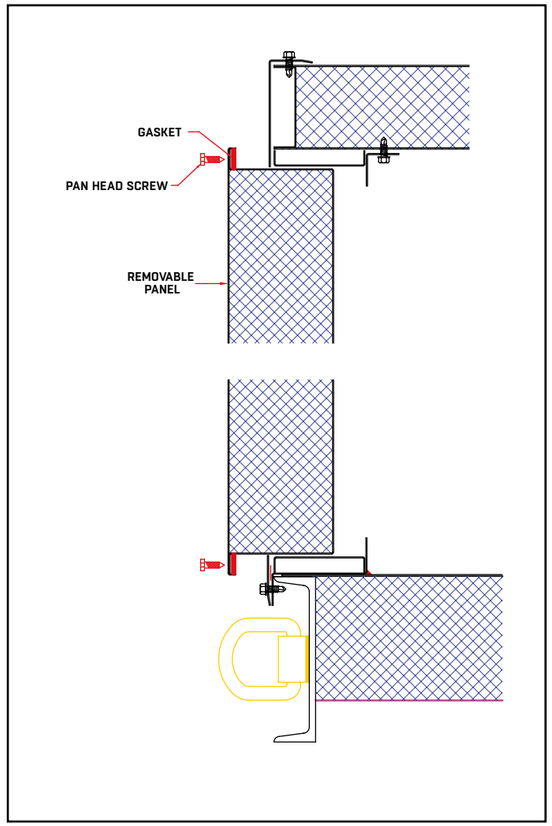

FIGURE 14. Detailed drawing of removable panel installation.

23) Complete electrical and control connections across field joints. Use coded wires or terminal strips in junction boxes and the flex connections provided. Wiring diagrams are attached to the inside of the electrical panel.

24) Complete service connections to piping and power. Be certain to check specific requirements for electrical power to the energy recovery unit, fans, dampers and other electrical devices.

25) For components, please reference instructions in the following sections of this manual before proceeding.

MOUNTING DETAILS, CURB SUPPORT

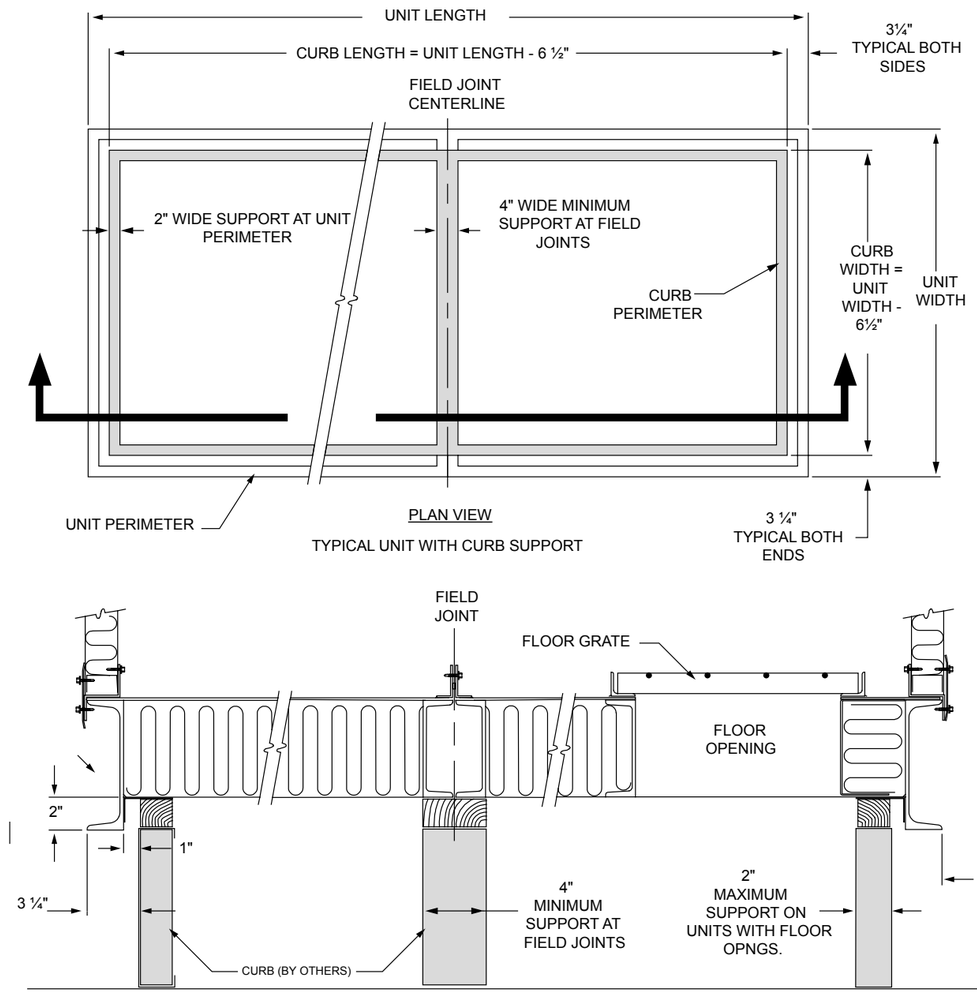

NOTES

1. ROOF CURB SHOULD BE SIZED TO ALLOW UNIT TO HANG OVER CURB.
2. CURB SIZE:
   WIDTH = UNIT WIDTH - 6.5"
   LENGTH = UNIT LENGTH -6.5"
3. UNIT SUPPORT IS REQUIRED AROUND THE ENTIRE PERIMETER AND ALONG BOTH SIDES OF ANY FIELD JOINTS.
4. WHEN UNITS REQUIRE FIELD JOINTS, SUPPORT SHOULD BE LEVEL TO 1/16" BETWEEN FIELD JOINTS.

SECTION

SELF FLASHING UNIT BASE
SHOWING CURB SUPPORT REQUIREMENTS

MOUNTING DETAILS, GRID OR PAD SUPPORT

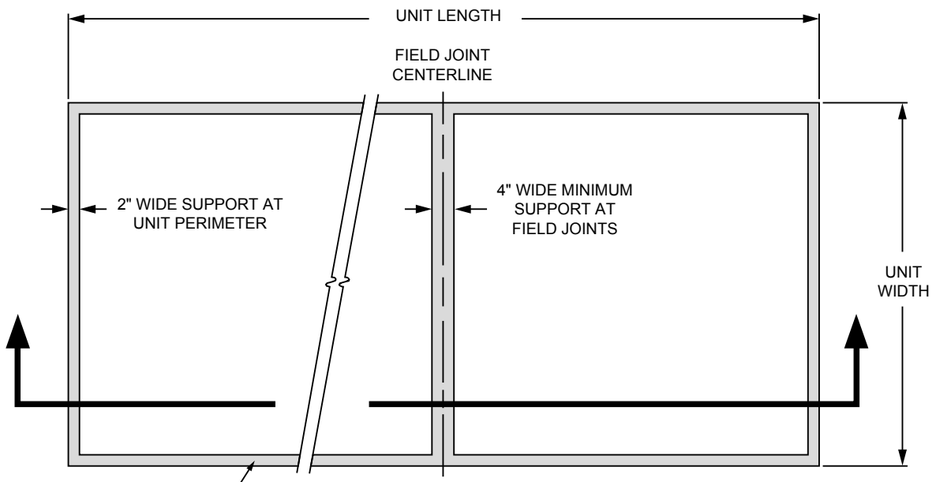

PLAN VIEW
TYPICAL UNIT WITH HOUSEKEEPING PAD OR STRUCTURAL GRID SUPPORT

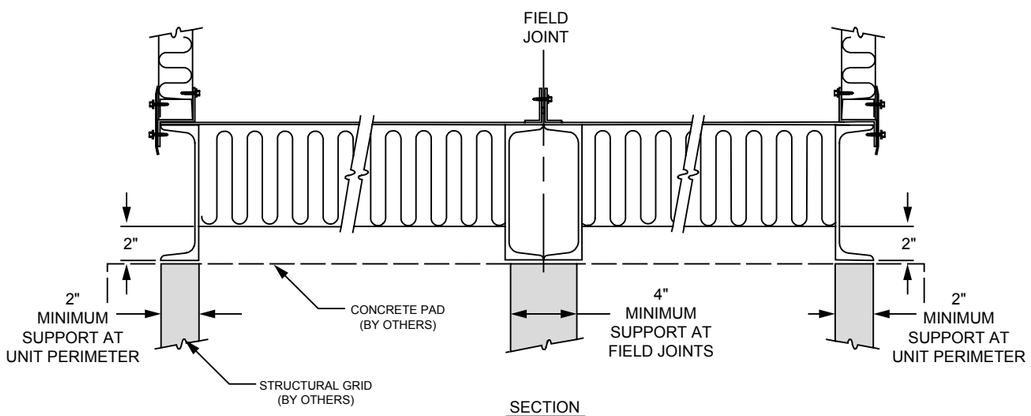

SECTION
UNIT BASE WHEN MOUNTING ON PAD OR STRUCTURAL GRID

NOTES

1. UNIT SUPPORT IS REQUIRED AROUND THE ENTIRE PERIMETER AND ALONG BOTH SIDES OF ANY FIELD JOINTS.
2. WHEN UNITS REQUIRE FIELD JOINTS, SUPPORT SHOULD BE LEVEL TO 1/16" BETWEEN FIELD JOINTS.

ENERGY RECOVERY WHEEL

All necessary energy recovery wheel components have been installed at the factory and tested for proper operation prior to shipping. See **FLÄKTGROUP SEMCO'S ENERGY RECOVERY WHEEL OWNER'S MANUAL** for complete details on wheel start-up and maintenance.

1) Pump grease into the two rotor bearing grease fittings using a high quality NLGI No. 2 grease (See **FIGURE 15**).

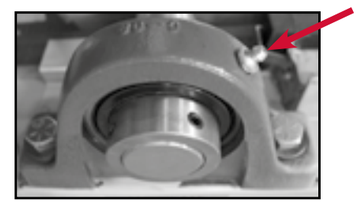

FIGURE 15. Pump grease into two rotor bearing grease points, one on each side of the rotor.

2) Remove shipping restraint located in the supply air side of the wheel near the drive motor. Remove all bolts and discard. The shipping restraint prevents the rotor from turning during shipment (See **FIGURES 16** and **17**).

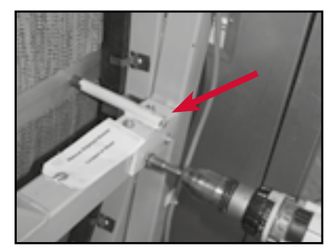

FIGURE 16. Shipping restraint for flat rim wheel.

FIGURE 17. Shipping restraint for ribbed rim wheel.

3) Turn rotor by hand in the direction indicated by rotation arrows to verify that the rotor does not bind (See **FIGURE 18**). If binding occurs in a new unit, it is usually caused by the labyrinth seal or freight damage. To adjust the seals, loosen the screws holding the seal clips in place, adjust the seal so it just contacts the surface of the wheel/rim, and then re-tighten the screws.

FIGURE 18. Rotate the rotor at least three turns in the direction indicated by the rotation arrow.

4) Inspect the rotor visually. It should be well centered in its casing and should not tilt in any one direction. If alignment is not suitable, contact FläktGroup SEMCO.

5) Inspect the bearing bolts, rim bolts, and the Allen screws on the bearing collar to ensure that all are tight (See **FIGURE 19**). Tighten any loose screws and bolts according to torque values described in the **FLÄKTGROUP SEMCO ENERGY RECOVERY WHEEL OWNER'S MANUA**l.

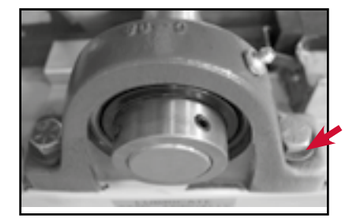

FIGURE 19. Inspect bearing collar to ensure all bolts and screws are tight.

A copy of the SEMCO Energy Recovery Wheel Owner's Manual can be found online at www.semcohvac.com

SEALS & PURGE ADJUSTMENT

Refer to the **FLÄKTGROUP® SEMCO® ENERGY RECOVERY WHEEL OWNER'S MANUAL** for seal and purge setting procedure and other wheel maintenance information.

WALL MOUNTED EC FANS

All necessary system fans and fan motors are installed at the factory. However, before attempting to operate them, a pre-startup inspection is recommended.

1) Make sure all power to the fan motors is off.

2) When checking the fan, be sure to:

- **A)** Check fan bolts and mountings for tightness. Tighten any loose screws and bolts.
- **B)** Rotate the impeller by hand; it should turn freely. If not, check for obstructions and contact FläktGroup SEMCO.
- **C)** Ensure that the fan wheel, drives and fan interiors are clean and free of debris.

3) Check supply fan motor mountings for tightness to ensure that they have not loosened during transit or on-site installation. If necessary, tighten loose mountings. Turn motor shaft by hand to verify that it turns freely.

Wall mounted EC fan

OPERATION

1) After completing inspection checks on fans, turn power on then off quickly. Power should be on just long enough to start fan rotation.

2) If fans start rotating in the wrong direction (see arrow on the blower) turn off power immediately. To correct rotation, lock out power to the unit feeder, and switch any two line power wires.

3) Using an amp probe or amp meter, check the actual operating current of the motor to make sure it is not being overloaded or underpowered. The operating current must not exceed the nameplate current.

4) Allow the assembly to run for about an hour. During this time, listen for any unusual sounds. To correct noise problems, see **TROUBLESHOOTING** on **PAGE 16**.

PLENUM FANS

All necessary system fans and fan motors are installed at the FläktGroup SEMCO factory. However, before attempting to operate them, a pre-startup inspection is recommended.

1) Make sure all power to the fan motors is off.

2) Each fan is restrained in six places using all-thread, (See **FIGURE 20**). Read **STEPS 3** and **4** for proper restraint removal **BEFORE** removal.

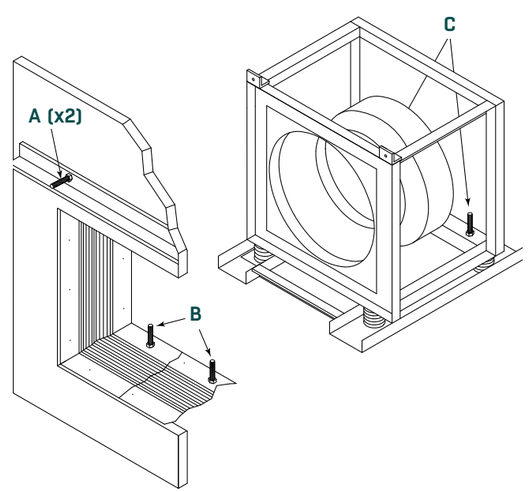

FIGURE 20. Fan with typical shipping restraints.

- **A)** Two restraints at the top of the fan bolting the fan to the fan wall (See **FIGURE 21**).

FIGURE 21. Two restraints at the top of the fan bolting the fan to the fan wall.

- **B)** Two in the fan inlet which bolt the fan to the base rail (See **FIGURE 22**).

FIGURE 22. Two in the fan inlet which bolt the fan to the base rail.

- **C)** Two at the base of the rear of the fan (below the belt guards) which bolt the fan to the base rail (See **FIGURE 23**).

FIGURE 23. Two at the base of the rear of the fan.

3) First, remove the restraints from the top of the fan.

- **A)** The nut on the inlet side of the fan wall should be removed first (See **FIGURE 24**).

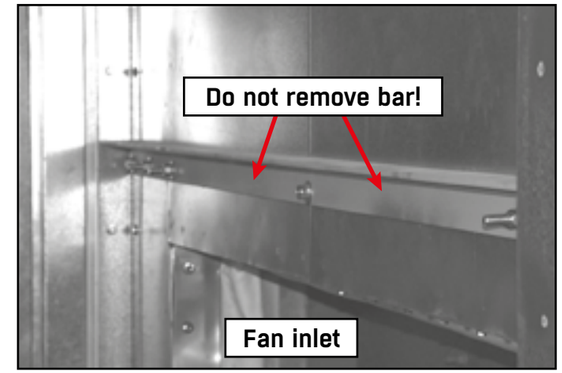

FIGURE 24. Instructions for removing through-wall bolts.

- **B)** Then from the fan compartment the restraint can be removed from the lifting eye on the fan, pulled from the wall, and discarded (See **FIGURE 21**).
- **C)** **Do NOT** remove the support bar attached to the wall (See **FIGURE 24**).

4) Next, loosen the restraints at the base of the fan.

- **A)** The nuts should be removed which will relieve the spring pressure.
- **B)** Then each of the remaining pieces of all-thread should be un-threaded from the base and discarded.
- **C)** Remove wooden blocks and discard all shipping restraints (See **FIGURE 25**).

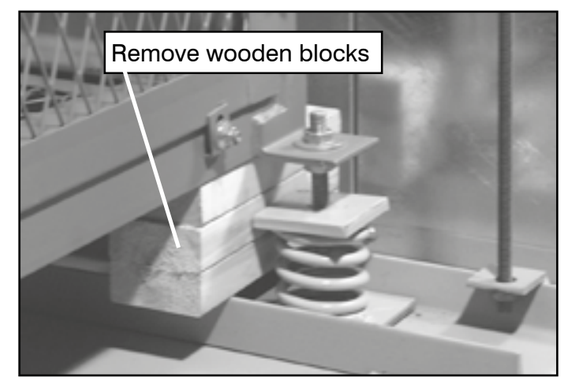

FIGURE 25. Fan shipping restraints located at the base of the fan.

FIGURE 26. The fans may be mounted on seismic arrest mounts **NOT STANDARD**

5) When checking the fan, be sure to:

A) Check fan bolts and mountings for tightness. Tighten any loose screws and bolts.

B) Rotate the impeller by hand; it should turn freely. If not, check for obstructions and contact FläktGroup SEMCO.

C) Ensure that the fan wheel, drives and fan interiors are clean and free of debris.

6) **MOTORS –** Be sure that the power supply matches the motor nameplate power.

Turn motor shaft by hand to verify that it turns freely.

OPERATION

1) After completing inspection checks on motors and fans, turn power on then off quickly. Power should be on just long enough to start fan rotation.

2) If fans start rotating in the wrong direction (see arrow on the blower) turn off power immediately. To correct rotation, lock out power to the unit feeder, and switch any two line power wires. To change rotation of only an inverter driven wheel and not the fans, switch any two VFD line power wires.

3) Using an amp probe or amp meter, check the actual operating current of the motor to make sure it is not being overloaded or underpowered. The operating current must not exceed the nameplate current.

4) Allow the assembly to run for about an hour. During this time, listen for any unusual sounds. To correct noise problems, see **TROUBLESHOOTING** on **PAGE 16**.

DAMPERS

Although the dampers have been installed and checked at the FläktGroup SEMCO factory, a pre-startup inspection is recommended to be sure that nothing has become detached or damaged during shipment or on-site installation.

INSPECTION

1) Check blade rotation clearance. Verify that blades open and close properly and rotate sufficiently. If they do not, check for obstructions, broken or bent blades, or loose linkage. Correct or repair as necessary (See **FIGURE 27**).

FIGURE 27. Be sure that damper blades open and close properly and have sufficient rotation clearance.

2) Be sure that actuator arms and bars connecting damper motors to control rods or shafts are tight. (See **FIGURE 28**).

FIGURE 28. Damper actuator.

3) The dampers are controlled by electric motors. Make sure that wiring is complete. Check the wiring diagram on the motor.

4) Turn on power and observe whether or not the controls trigger dampers correctly. Be sure that limit switches close when blades are open and open when blades are closed.

COILS

Heating and/or cooling coils can be ordered with the energy recovery system. All necessary heating and/or cooling coils have been installed at the FläktGroup SEMCO factory. However, before operating them, a brief pre-startup inspection is recommended.

INSPECTION

1) Inspect all pipe connections to verify they are tight and that no damage has occurred during transit or on-site installation.

2) **STEAM COILS –** Be sure that the unit is level so the coils inside the casing slope toward the header.

3) **HOT WATER COILS –** Check the freeze protection thermostat for proper operation so that it will function to prevent freeze-ups.

OPERATION

- **STEAM COILS –** Non-freeze steam coils are designed to operate steam pressures up to, and including, 150 psig.
- During initial operation, make sure that condensate flows back to the headers. Check for leaks.

FIGURE 29. Cooling coils should be checked for leaks during operation.

- **HOT & COLD WATER COILS -** are designed to operate at pressures to 250 psig, and temperatures to 250°F. Check for leaks during initial operation.
- **CONDENSER COILS -** are designed to withstand pressures up to 750 psig. Maximum temperature recommendations are not available, because refrigerant will determine temperature. During initial operation, check for leaks.
- **EVAPORATOR COILS -** are designed to withstand pressures up to 750 psig. Maximum temperature ecommendations are not available, because refrigerant will determine temperature. During initial operation, check for leaks.

DIGITAL SCROLL COMPRESSOR

Digital scroll compressors are factory installed and tested. As different applications have different start-up and running procedures, please refer to the manufacturer's complete start-up and adjustment instructions, or contact FläktGroup SEMCO for additional assistance.

DUCT HEATER

For units equipped with supplemental heaters, a minimum clearance of 36 inches (914 mm) must be maintained from the side of the unit featuring the control panel to combustible surfaces, per the National Electrical Code (NEC).

There is a specified minimum clearance of 6 inches (152 mm) on the back facing side of the unit. The minimum clearance should be followed, unless the amount specified by the local building code is greater.

Duct heaters have been factory installed and run tested. As gas pressures vary according to jobsite, manufacturer's complete start-up and adjustment instructions must be followed. Please refer to the manufacturer's literature included with unit for details or contact FläktGroup SEMCO for additional copies.

HUMIDIFIERS

FläktGroup SEMCO can provide a wide range of humidification options. Humidifier manufacturer, type, and degree of installation can vary from job to job depending upon job specifications. Consult humidifier manufacturer's literature for details related to installation, start-up, and troubleshooting.

AIR FILTERS

Air filters for the energy recovery system are boxed, tagged and shipped loose inside the system for field installation. This minimizes any risk for filter damage during transit. The air filters must place installed prior to startup or the warranty could be voided.

Throughout the operating life of the system, it will be necessary to replace filters as they accumulate dirt from the air stream.

The system is equipped with two pressure differential gauges. As air filters accumulate dirt, the pressure differential will rise.

The **PRE-FILTER CAPACITY AND RESISTANCE TABLE** (**FIGURE 30**) and **FINAL FILTER CAPACITY AND RESISTANCE TABLE** (**FIGURE 31**) provide data for most pre-filters and final filters used in FläktGroup SEMCO systems. For each filter size, the pressure differential (resistance at capacity) using new, clean air filters in air streams is shown. The capacities columns define airflow in cubic feet per minute. For specific airflows, interpolating and estimating will provide adequate data.

WHEN TO REPLACE FILTERS

It is recommended that filters be changed when the pressure differential gauge reaches the final resistance rating illustrated in **FIGURE 30** and **FIGURE 31**. Experience with the new system may suggest changing filters at a slightly higher or lower reading. Depending upon the total volume of air required in the building, altering the replacement differential may be necessary. But waiting to change filters when the pressure differential reaches or approaches a higher-than-recommended figure would mean using packed air filters that seriously reduce airflow.

If the system is ordered with final filters, then these will be located behind the pre-filters.

For systems equipped with pre-filter and final filter banks, it is recommended that pre-filter banks be changed twice as often as final filters.

For air filter replacement, a rigid, cell-type filter that matches the specifications shown in the **PRE-FILTER** and **FINAL FILTER CAPACITY AND RESISTANCE TABLES** is recommended.

PRE-FILTER CAPACITY AND RESISTANCE DATA									
FILTER DEPTH	NOMINAL SIZE (INCHES)	ACTUAL SIZE (INCHES)			CAPACITIES (CFM)		RESISTANCE @ CAPACITY (INCHES W.G).		
		WIDTH	HEIGHT	DEPTH	MEDIUM	HIGH	MEDIUM	HIGH	FINAL
4"	12x24x4	11.38	23.38	3.88	600	1200	.12	.35	.90
	24x24x4	23.38	23.38	3.88	1200	2400	.12	.35	.90
2"	12x24x2	11.38	23.38	1.88	500	1000	.08	.28	.90
	24x24x2	23.38	23.38	1.88	1000	2000	.08	.28	.90

FIGURE 30. Pre-filter Capacity and Resistance Data

12" FINAL FILTER CAPACITY & RESISTANCE DATA*						
FILTER MEDIA EFFICIENCY	NOMINAL SIZE (INCHES)	ACTUAL SIZE[1] (INCHES)		AIRFLOW CAPACITY (CFM)	RESISTANCE (IN. W.G).	
		WIDTH	HEIGHT		INITIAL	FINAL[2]
60-65%	12x24	11.38	23.38	1000	.29	1.5
	24x24	23.38	23.38	2000	.29	1.5
80-85%	12x24	11.38	23.38	1000	.50	1.5
	24x24	23.38	23.38	2000	.50	1.5
90-95%	12x24	11.38	23.38	1000	.68	1.5
	24x24	23.38	23.38	2000	.68	1.5

FIGURE 31. 12" Final Filter Capacity & Resistance Data*

***NOTES:**

1) Actual depth of 12" filter is 11.50"

2) Maximum recommended final resistance. System design may require a lower change-out resistance.

Maximum operating temperature limit for the filters is 180ºF in continuous operation, and 200ºF in intermittent operation.

	MODEL SIZE								
	PVS-03	PVS-05	PVS-09	PVS-13	PVS-18	PVS-24	PVS-28	PVS-34	PVS-43
SA FILTER QTY - SIZE (INCHES)	1 - 24x24	2 - 24x24	4 - 24x24	6 - 24x24	3 - 20x24	12 - 20x24	12 - 24x24	15 - 24x24	20 - 24x24
	2 - 12x24	2 - 12x24	2 - 24x12	-	9 - 20x20	-	3 - 12x24	-	4 - 12x24
RA FILTER QTY - SIZE (INCHES)	1 - 24x24	2- 24x24	2 - 24x24	3- 24x24	6 - 24x24	8 - 24x24	6 - 20x24	15 - 20x24	15 - 24x24
	2 - 12x24	2 - 12x24	3 - 12x24	3 - 12x24	2 - 12x24	-	9 - 20x20	-	3 - 12x24

FIGURE 32. Quantity and size of filters In standard units.

TROUBLESHOOTING: FANS, DRIVE BELTS, AND MOTORS

PROBLEM	POSSIBLE CAUSES	SOLUTION
VIBRATION	Out of balance fan motor.	Check for dirt. If dirty, clean motor.
		Airfoil blades are usually hollow. Check inside for moisture. If it is accumulating, drill 3/16" drain hole on trailing edge to solve accumulation problem.
	Loose mounting bolts.	Tighten bolts.
	Bent fan shaft.	Check shaft with dial indicator. If bent, replace shaft immediately.
	Fan operating in stall or unstable flow.	Make sure system is operating at design static pressure and design flow rates.
NOISE, HIGH-PITCHED SQEALING	Misaligned bearing seals.	Realign face of bearing so that it's perpendicular to the shaft.
NOISE, MOTORS	Supply voltage is high or inconsistent.	Check supply voltage with voltmeter.
		Correct supply voltage if necessary.
OVERHEATING BEARINGS	Overgreasing.	Let bearing run and purge excess grease. Adjust lubrication schedule.
	Improper grease.	Only use a grease recommended on the fan lubrication decal. Don't change from one grease brand to another. Use same brand consistently.
	Wearing, failing bearings.	Replace bearings.
POOR AIR PERFORMANCE	Incorrect fan rotation	Rotation can be changed on 3-phase motors by reversing any 2 motor leads.
	Abrupt turn in duct close to fan discharge or air pre-spin caused by elbows at fan inlet.	Install turning vanes or elbow splitters in duct. If m ore change is needed, discharge position may have to be changed.
	If fan has inlet volume control, is it properly installed?	Inlet volume control must be installed with pre-spin of the air in the direction of wheel rotation when control is partially closed.
	Devices for air modulation closed or plugged.	Open or unplug.
	Clogged filters	Replace filters
	Improperly mounted fan wheel, or off-center wheel.	Center fan between inlet cones to avoid overloading one side and starving the other side. Correct wheel mounting.
	Fan power draw unexpectedly low.	• Correct air pre-spin into fan inlet. • Resistance to air flow is much higher than calculated; check for closed damper or other duct obstructions; recheck duct layout.
	Fan power draw is unexpectedly high.	• Fan speed may be too high. Fan may operate without duct work at low resistance so too much air flows. • Fan may be handling ambient air instead of intended hot, less dense air. • Fan may be running backward; check and correct if necessary.
	Damaged or dirty fan or system	Clean fan or systems, or replace damaged parts.
MOTOR PROBLEMS	Incorrect wiring	Correct wiring
	Fan speed too high	Check fan speed against submittal
	Parts improperly installed or binding	See **INSPECTION** at the beginning of the manual. Re-check and correct if necessary.
	Bearings improperly lubricated	See **MOTOR LUBRICATION** instructions on **PAGE 19**. **DO NOT** over-lubricate.
	Protection devices may be improperly sized	Check against the submittal.

TROUBLESHOOTING

DIGITAL SCROLL COMPRESSOR — MODULATION

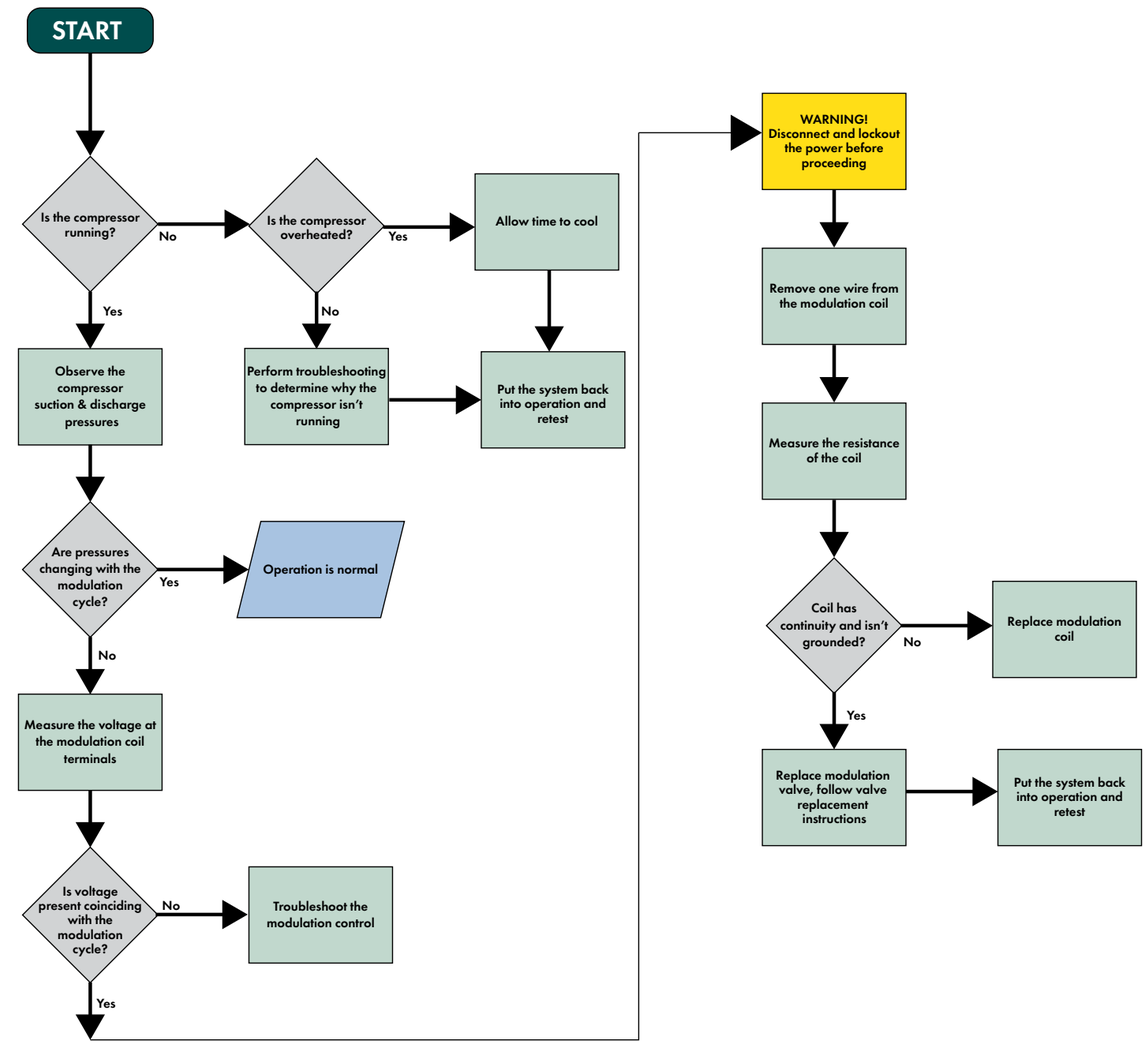

MAINTENANCE

DAILY MAINTENANCE

It is recommended that the unit be visually inspected daily. Taking a few moments each day to make sure that the unit is functioning will save many future hours, dollars and headaches. Each day, ensure that:

- The rotor is rotating under power;
- The motor is running;
- All devices are on and operating (the variable frequency controller, temperature controller, and rotation detector).

All other maintenance activity should be conducted monthly, quarterly, semiannually or annually as described in this manual. All essential maintenance services are summarized in the **MAINTENANCE SCHEDULE** below.

MAINTENANCE SCHEDULE				MONTH			
COMPONENT	SERVICE	STARTUP	1	3	6	9	12
WHEEL *(SEE ENERGY RECOVERY WHEEL OWNER'S MANUAL FOR MORE INFORMATION)*	Rotor bearing lubrication	X			X		X
	Bearing bolts tightness	X					
	Bearing set screw tightness	X	X		X		X
	Motor and gear reducer bolt tightness	X	X		X		X
	Check seals	X	X		X		X
	Check/clean variable frequency controller						X
	Drive system	X			X	X	X
FAN	Check/clean shaft and wheel	X		X	X	X	X
FAN MOTORS (PLENUM ONLY)	Clean motors				X		X
	Inspect motor connections				X		X
	Check operating current				X		X
	Check motor bolt tightness				X		X
	Lubricate motor bearings						X
DAMPERS	Check rotor blade clearance	X					
	Inspect damper for dirt and foreign matter			X	X	X	X
	Inspect damper seals for deterioration			X	X	X	X
FILTERS	Replace based on pressure differential						

MAINTENANCE: SYSTEM

The system enclosure requires very little maintenance since it is constructed of strong, weather-resistant materials. Equipment contained within the enclosure requires regular maintenance to keep the system operating smoothly. You will find maintenance instructions for every component in this section.

Inspect the enclosure periodically:

- Check for air leaks in the casing
- Ensure modules remain level
- Make sure that doors do not bind
- Check around all penetrations and roof joints to be sure that seals remain tight and do not leak

MAINTENANCE: WHEEL

The True 3Å® Energy Recovery Wheel Unit will operate efficiently and reliably for many years with minimum maintenance and service. Most maintenance activities require little more than checking various devices and parts to make sure they are tight or functioning properly.

DAILY MAINTENANCE

It is recommended that the unit be visually inspected daily. Taking a few moments each day to make sure that the unit is functioning will save many future hours, dollars and headaches. Each day, ensure that:

- the rotor is rotating under power;
- the motor is running;
- and all devices are on and operating (the variable frequency controller, temperature controller and rotation detector.)

All other maintenance activity should be conducted monthly, quarterly, semiannually or annually as described in the **FLÄKTGROUP SEMCO ENERGY RECOVERY WHEEL OWNER'S MANUAL**.

MEDIA CLEANING

Semi-annually, or more frequently if pressure drop across the wheel increases at a given airflow, clean wheel media by air blowing at 100 psi while using a vacuum or other device to collect any dust or debris that may exit the other side. Extra care should be taken to ensure that the air nozzle or vacuum/other device does not touch or damage the rotor surface. See **FLÄKTGROUP SEMCO ENERGY RECOVERY WHEEL CLEANING PROCEDURE** in the **ENERGY RECOVERY WHEEL OWNER'S MANUAL**.

MAINTENANCE: PLENUM FAN MOTORS

- Motors will operate effectively for years if operated by proper current and kept clean, dry and properly lubricated.
- Clean motors every six months. Use moderate air pressure (25-30 psi) to blow away dirt from vent fins and other accessible areas.

  NOTE: Keep areas surrounding the motors clear so air can circulate freely through the motor to cool it.
- Inspect connections every six months. Watch for frayed or exposed wiring and loose connections. Repair or tighten as necessary.
- Check operating current every six months. Make sure that motors continue to operate at faceplate current or below.
- Check for vibration and for mounting-bolt tightness every six months. Tighten any loose mounting bolts. Make sure that motor runs smoothly without vibrating.
- Lubricate motor bearings with one or two squirts of high grade, lithium-based grease annually (Chevron SRI #2 or similar recommended). Do not over lubricate! Consult motor manufacturer for detailed lubrication instructions.
- Check shafts and fan wheels every three months for dirt buildup, corrosion and cracks, and other signs of stress or fatigue. Clean as necessary, and apply new coatings when appropriate.

  NOTE: After applying new coatings and/or applying welds to the fan, be sure to check the assembly's balance. The application of welds and coatings can cause an imbalance.
- Lubricate fan bearings according to label decals that describe lubrication intervals and suggested lubricants.

  All fans installed are labeled with similar decal instructions (See **FIGURES 33** and **34**).

FIGURE 33. All fans installed in FläktGroup SEMCO systems are labeled with lubrication instructions that should be followed. On smaller fans the label can be found on the fan frame.

FIGURE 34. The lubrication label for larger fans is located on the fan inlet housing.

- When applying grease, observe the condition of the grease expelled from the bearings. Also note the amount of grease used. Both observations will suggest whether or not the lubrication schedule should be increased or decreased.

  Also note that all bearings are originally filled with grease at the factory. When the fans are started, the bearings may discharge excess grease through the seals for a short period of time. If so, it is not necessary to replace this initial discharge.

MAINTENANCE: EC FANS

EC fans are relatively maintenance free, but do need to be Inspected regularly for dirt. If necessary, clean fan impellers to prevent imbalance due to contaminant build-up. Fans in areas with high levels of contamination will need to be cleaned more frequently.

Ball-bearings will not have to be greased unless fans are installed in AHUs located in areas with high humidity, heavy soiling, or excessive vibrations.

NOTE: Before inspecting or cleaning, make sure that the fan motor is off and that any electrical faults that may occur within the operating system are corrected.

WARNING: voltage supply motor must be interrupted and secured against restoration before cleaning

MAINTENANCE: DAMPERS

- Every 3 months, inspect dampers, arms, bars, and control rods and shafts for dirt and other foreign matter that would impede normal movement and prevent blades and seals from seating properly. Clean as necessary.
- Inspect seals every three months to be sure that none have pulled loose or deteriorated. If replacement is required and the seal can be replaced, remove it and replace with a new seal of the same shape, design and material used originally. Do not use a different size or shape. In some instances, the seal may not be replaceable and it may be necessary to replace the entire blade.
- No lubrication required. Damper shafts utilize non-lubricating bearings.

MAINTENANCE: COILS

Heating and cooling coils function at peak efficiency when clean and free of foreign matter. Frequent visual inspections should be made, and any built up dirt and foreign matter should be removed. A fin comb may be required to remove matter entangled in fins or coils (See **FIGURE 35**), but flushing with water under normal local pressure will remove most particulates.

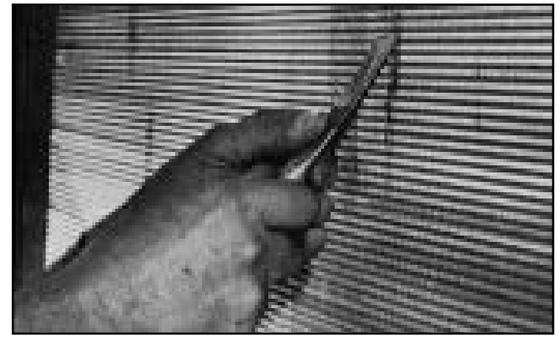

FIGURE 35. A fin comb may be used to remove matter entangled in fins, as well as to straighten fins. But normally, flushing coils with water under normal pressure will remove most matter.

- An acid or alkaline coil cleaner is recommended every 1 or 2 years, depending upon the degree of oxidation, to thoroughly clean and brighten coils and fins.
- Local water conditions may make it necessary to treat chilled water systems, hot water systems and steam systems to control corrosion, sludge and/or metal oxides. In some water supplies, scale removers and inhibitors may also be required.
- Cooling coils – If water in the system will be exposed to outdoor temperatures that are below freezing, either drain the system before temperatures dip below 32°F, or add glycol to the system to prevent freezing.

FläktGroup® SEMCO® delivers smart, energy-efficient, air-quality solutions to support every building application. We offer our customers innovative technologies, high-quality products and outstanding performance supported by more than fifty years of accumulated industry experience. The broadest offering on the market and a strong market presence in 65 countries worldwide guarantees that we are always by your side, ready to deliver: Excellence in Solutions.

FläktGroup® SEMCO®
Corporate Headquarters
1800 East Pointe Drive
Columbia, Missouri 65201 USA

573.443.1481

sales.semco@flaktgroup.com

To learn more about FläktGroup SEMCO offerings and to contact your nearest representative please visit

www.semcohvac.com

© Copyright 202 SEMCO LLC. All Rights Reserved. SEMCO embraces a policy of continuous development and improvement, the right is reserved to supply products which may differ from those illustrated and described in this publication. Certified dimensions will be supplied upon request on receipt of order. Any FläktGroup SEMCO purchase is subject to FläktGroup SEMCO standard terms and conditions. Pinnacle, True 3Å and SEMCO are a registered Trademarks of SEMCO LLC. Other trademarks and logos in this publication may be property of SEMCO, LLC, its subsidiaries or any of its related companies and/or other organizations or individuals.