FläktGroup®

SEMCO®

PINNACLE® SYSTEM

DEDICATED OUTDOOR AIR SYSTEM

TECHNICAL GUIDE

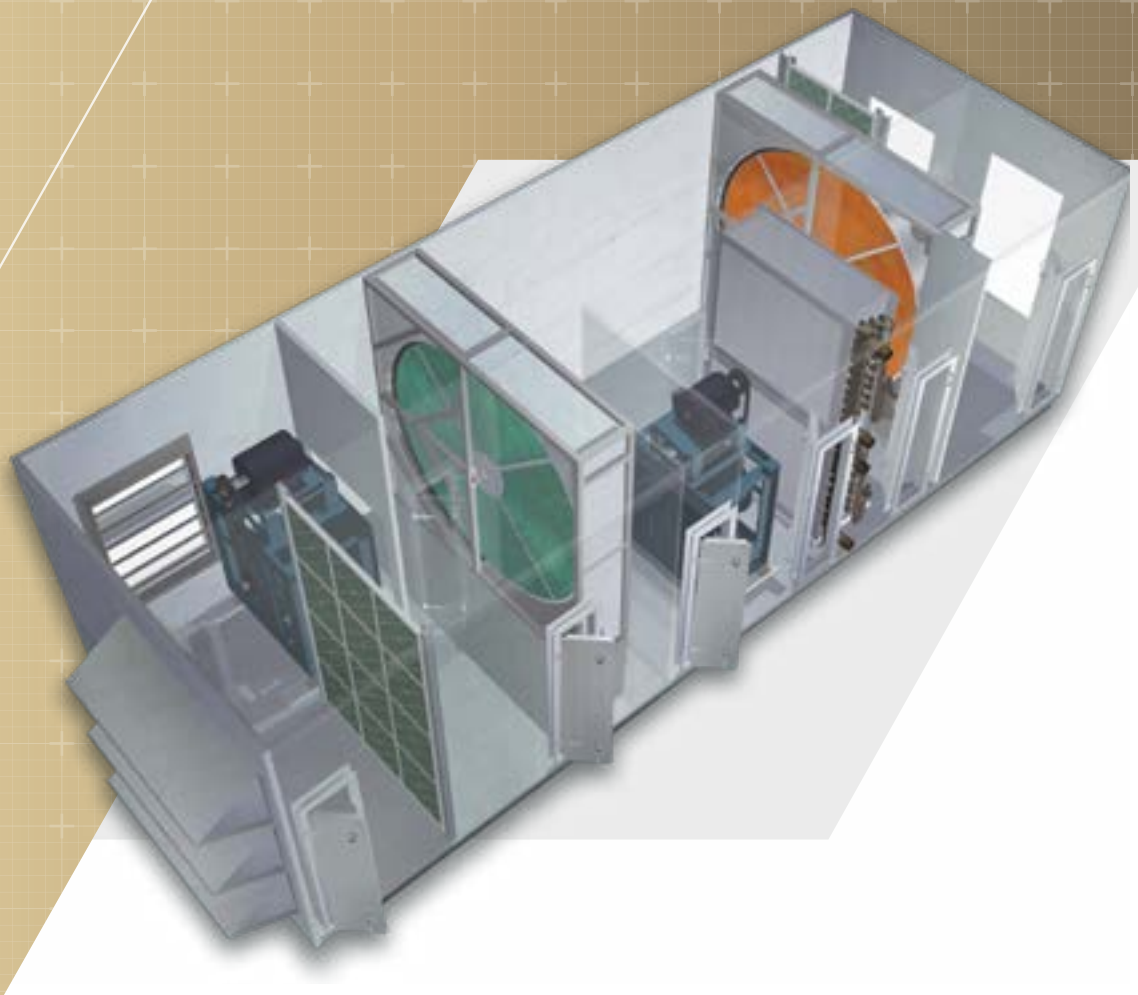

TABLE OF CONTENTS

Overview	1
Current Design Practices	2
Background of the Pinnacle® I System Technology	2
The Pinnacle® System	3
How it Works	4
Important Advantages of the Pinnacle® System	8
School Application	9
Benefits During Unoccupied Periods	10
Benefits During Heating Season	11
Conclusion	11
Selection Procedure	12
Unit Weights and Dimensions	13
PVS 3 - 43	13
PVSH 3 - 28	14
PVSH 35 - 43	15
Mounting Details, Curb Support	16
Mounting Details, Grid or Pad Support	17
Electrical Data	18
Electrical Schematic	19
Component Pressure Drop Tables	21
Fan Data Tables	22
Coil Data Tables	28
Sample Specifications	32
Equipment Summary	39

© FläktGroup SEMCO LLC 1996-2021. All rights reserved.
The information in this technical guide is furnished for informational use only, is subject to change without notice, and should not be construed as a commitment by FläktGroup SEMCO. FläktGroup SEMCO assumes no responsibility for any errors that may appear in this technical guide.
No part of this publication may be reproduced, stored in a retrieval system or transmitted, in any form or by any means, electronic, mechanical, recording, or otherwise, without the prior written permission of FläktGroup SEMCO.
FläktGroup SEMCO and Pinnacle® are registered trademarks of Fläktgroup SEMCO LLC. All other trademarks referenced herein are the properties of their respective owners.

OVERVIEW

Energy efficient design and indoor air quality are the two challenges facing mechanical engineers today in the field of Heating, Ventilating and Air Conditioning (HVAC). To minimize the loss of energy, building envelopes have been made more energy efficient. This reduces the cost associated with cooling or heating the building. By tightening the building envelopes, the amount of outside air entering the building is reduced. However, that outside air is needed to remove the air contaminants generated indoors. Flushing these pollutants from the indoors to the outdoors has been the most effective way of reducing indoor air contaminants to acceptable levels.

The HVAC industry has responded to these indoor air quality (IAQ) concerns through its professional organization, The American Society of Heating and Refrigerating and Air Conditioning Engineers (ASHRAE). ASHRAE IAQ Standard 62, entitled "Ventilation for Acceptable Indoor Air Quality," emphasizes the need for continuous outdoor air ventilation as well as the importance of maintaining indoor humidity levels. This standard has now been integrated, in some fashion, into each of the major building codes used throughout the United States.

Most people are aware that outdoor air pollution can damage their health, but many do not know that indoor air pollution can also cause harm. Environmental Protection Agency (EPA) studies of human exposure to air pollutants indicate that indoor levels of pollutants may be 2-5 times, and occasionally more than 100 times, higher than outdoor levels. These levels of indoor air pollutants are of particular concern because it is estimated that most people spend about 90% of their time indoors.

Studies have found that the quality of indoor air has been linked to many illnesses (sick building syndrome and building related illnesses), and has been shown to have a direct impact on worker and student productivity and comfort. New research strongly suggests that indoor humidity levels have a far greater impact on the health of building occupants than previously suspected. For example, microbial activity (e.g., mold and fungus), which increases at higher indoor humidity levels, has been shown to emit harmful organic compounds. Childhood asthma is now suspected by some researchers to be linked to microbial activity.

In addition to direct health effects, the odors associated with microbial activity are often cited as a primary reason why indoor air quality is considered unacceptable to occupants. When odors are encountered in a building, building managers often respond by increasing outdoor air quantities in an attempt to eliminate odors. This intensifies the problem because increasing outdoor air quantities often results in higher indoor humidity levels, which, in turn, fosters continued microbial activity.

CURRENT DESIGN PRACTICES

Systems currently being employed to accommodate the new IAQ code requirements fall into two categories; traditional designs using a cool-and-reheat approach or more advanced, desiccant-based solutions. The cool-and-reheat method increases the cooling capacity to "over-cool" the outdoor air volume to the required humidity content, then reheat the "over-cooled" airstream to near-room neutral temperature. This approach is perceived as the "lowest cost" solution and is therefore the most popular, yet the energy consumption is very high.

More advanced systems, such as those that include both active and passive desiccant based technology, provide far more energy efficient solutions. They typically require only a third of the energy consumed by the cool-and-reheat method. In the past, their size and first cost has limited their widespread acceptance in the marketplace.

So, there is, a significant need for a novel, compact system design which effectively controls the indoor space humidity while simultaneously providing high quantities of outdoor air in an energy-efficient and cost-effective manner. The benefit of such a system is greatly increased if that system can also provide preconditioned outdoor air to a space at humidity levels well below what is possible with conventional cooling alone.

BACKGROUND OF PINNACLE® TECHNOLOGY

Facilities with high occupancy rates or elevated levels of indoor contaminants, such as schools, hospitals, nursing homes, and many offices, require large amounts of outdoor air. This presents a significant HVAC design challenge. This challenge is further exacerbated in hot and humid climates, due to the high humidity levels and large number of partial-load cooling hours. Maintaining relative humidity levels recommended by the ASHRAE Standard 62 is difficult and costly if conventional HVAC approaches are used for such facilities.

Conventional packaged equipment is designed to accommodate approximately only 15 to 20% outdoor air on an intermittent basis. If the equipment is applied to provide higher outdoor air quantities on a continuous basis — as called for by ASHRAE Standard 62 — unacceptably high space humidities can result for extended periods of time.

At partial load conditions, e.g., on days when the temperature is moderate but the humidity is high, a packaged HVAC unit will quickly bring the space to the desired set point temperature, then cycle off. Generally, no outdoor air is brought into a conditioned space as long as the thermostat does not call for cooling. Since there is no humidity control exercised, the indoor humidity increases until the sensible load in the space causes the thermostat to call for cooling. By this time, the mixed air condition supplied to the coil is elevated in humidity. This results in a high dew point temperature leaving the cooling coil.

The space temperature is maintained but humidity control is lost, resulting in elevated space humidity conditions, which promote microbial growth and other moisture related IAQ problems.

Given that all of the major building codes now require compliance with the ASHRAE Standard 62 and that data supporting the need for improved humidity control is available and that 80-90% of all HVAC sold in the U.S. each year are conventional packaged units — effective solutions that will allow packaged equipment to accommodate more outdoor air on a continuous basis are needed. The solution is the Pinnacle® Series.-

THE PINNACLE® SYSTEM

The Pinnacle® Series economically provides high quantities of outdoor air and controls indoor humidity levels at the same time. It accomplishes this by dehumidifying the supply air to very low dew points in an energy efficient manner, without the use of a regeneration heating source. It continuously delivers the outdoor air to the occupied space while simultaneously controlling humidity levels at the conditions recommended by ASHRAE, even at partial-load conditions. The Pinnacle® Series is capable of providing a very high degree of latent cooling using only a minimum amount of conventional cooling input.

The Pinnacle® Series approach utilizes the strengths of passive total energy recovery, conventional cooling technology and a new class of desiccant product, the passive dehumidification wheel, to provide the best possible outdoor air preconditioning system.

The system is comprised of a supply fan, an exhaust fan, a total energy wheel, coil(s), a passive dehumidification wheel and compressor. The total energy wheel is used to precondition fresh air using the exhausted building air. The cooling coil and passive dehumidification wheel then work in concert to further treat this fresh air stream to produce room temperature air at a much reduced humidity level.

An example of the Pinnacle® Series capabilities:

10,000 CFM Pinnacle® Series Unit

50 tons of latent load (68 tons of total load)

Uses an input of **only 32** tons of conventional cooling

Conventional Over-Cooling Unit

90 tons cooling input

15,000 cfms + reheat energy

HOW IT WORKS

The key to providing the exceptional dehumidification capability provided by the Pinnacle® I System is the passive dehumidification wheel. This wheel uses a desiccant material that is optimized to remove moisture from a saturated air stream.

The Pinnacle® I System can provide dry outdoor air in an extremely energy efficient manner. All the components, coil(s), total energy recovery wheel, compressor and the passive dehumidification wheel — are optimized to operate in their most efficient respective envelopes. The result is minimal cooling energy input and maximum latent cooling output. As importantly, by changing the rotational speed of the "passive" dehumidification wheel, the amount of dehumidification capacity and the amount of reheat energy available can be optimized to meet the requirements of varying space temperatures and humidities.

The Pinnacle® I System has the advantage over conventional HVAC systems of being able to respond to various combinations of temperature and humidity, including the conditions described above, in an energy efficient manner and while providing humidity levels well below that possible with other conventional approaches.

The Pinnacle® I System is able to respond to these varying conditions by modulating the rotational speed of the passive dehumidification wheel, and/or adjusting the energy input to the cooling coil. The rotational speed can be adjusted to control the level of temperature and moisture exchanged by the passive dehumidification wheel. The integrated DX loop further controls the cooling and dehumidification capacities and can be adjusted and optimized based upon the conditions in the space, providing various combinations of temperature and humidity, to maintain the desired, indoor conditions.

For example, during times when the space humidity content is as desired but is too hot, the controlled space can be cooled by the Pinnacle® I System without substantially lowering the space humidity. To do so the Pinnacle® I control system would increase the cooling output and adjust the rotational speed of the passive dehumidification wheel to a predetermined range at which it would provide a minimal amount of reheat to the supply air stream.

When the space is too hot and too humid, the controlled space is cooled and dehumidified by increasing the output of the coil(s), and optimizing the rotational speed of the passive dehumidification wheel so that the dehumidification provided is maximized while the reheat capacity is minimized.

When the space is too cold and too humid, the controlled space is dehumidified without being cooled, by increasing the cooling output of the coil(s) and adjusting the rotational speed of the passive dehumidification wheel to provide maximum dehumidification and maximum reheat.

And finally, when the space requires heating, the passive dehumidification wheel and the cooling coil are turned off. The total energy recovery wheel preheats and humidifies the incoming air. In many buildings, this is sufficient to allow the building to be heated by its internal loads.

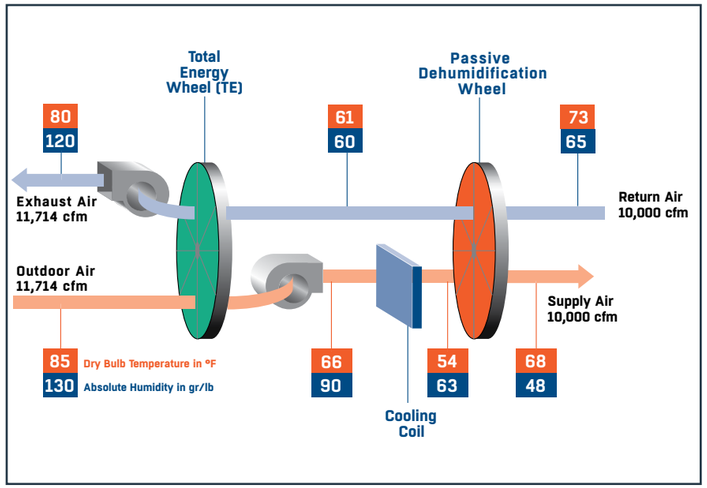

FIGURE 1 Operating at peak space latent load providing 87.33 tons of total cooling at a sensible heat ratio (SHR) of 0.27 using only 51.4 tons of refrigeration input. The dew point delivered to the space is 47.1°F. A conventional system with the same leaving coil temperature will NOT deliver the same dew point. It would require 97.4 tons of refrigeration and 226 MBtuh to achieve the same leaving coil condition.

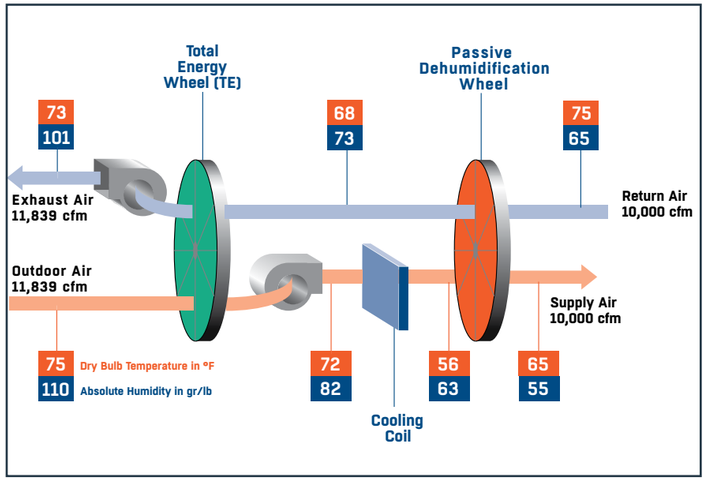

FIGURE 2 Operating at part-cooling load providing 60.3 tons of total cooling at a SHR of 0.16 using only 35.5 tons of refrigeration input. An equivalent conventional system would require 72.1 tons of cooling and 260 MBtuh of reheat to achieve the same leaving cooling coil temperature, yet without being able to deliver the same dew point of 50.67°F.

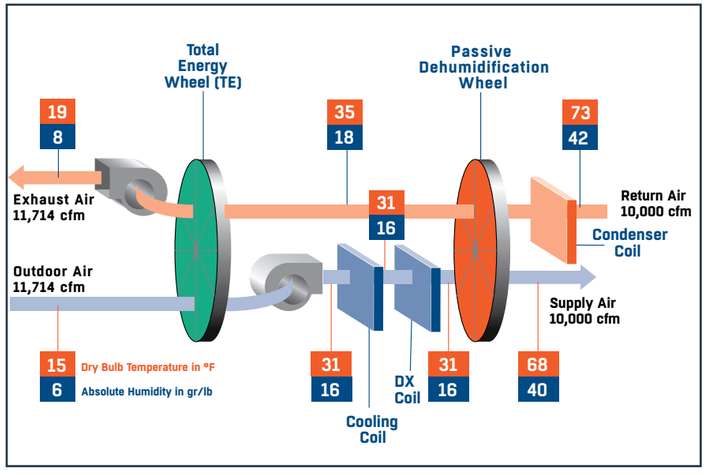

FIGURE 3 Schematic of the Pinnacle system operating in heating mode providing 573 MBtuh of energy and 219 MBtuh of humidification.

ADVANTAGES OF THE PINNACLE SYSTEM

The two most significant advantages offered by the Pinnacle® I system, when compared with the traditional over-cooling-and-reheat systems, are that the dehumidification or latent capacity (e.g., dryness of the air provided to the controlled space) is significantly increased and the energy efficiency is greatly improved.

The Pinnacle® I System has more latent capacity and higher energy efficiency than a desiccant-based cooling (DBC) or a dual-wheel energy recovery system (DWERS).

For example, a DBC system processing outdoor air on a latent design day (85°F and 130 gr/lb) is limited to a supply air condition of approximately 60 grains with technology currently available. To reach this condition requires the equipment to be operated at very low face velocities (resulting in very large system space requirements) and requires that the air be reheated at very high regeneration temperatures at very high regeneration temperatures (large, costly energy inputs).

The DWERS and other conventional over-cooling-and-reheat systems are limited by the humidity level of the air leaving the cooling coil. Since most conventional cooling systems have a practical limit of approximately 48°F leaving air temperature, the absolute humidity level obtainable from most conventional systems is about 50 grains per pound of moisture (gr/lb).

As a result, the only commercially available way to dehumidify outdoor air below approximately 50 grains of moisture involves cooling the outdoor air below approximately 48°F, and requires expensive, non-standard cooling equipment with very deep cooling coils, complex controls with defrost cycles and significantly elevated kW/ton energy consumption (i.e. poor energy efficiency).

The Pinnacle® I System can provide outdoor air at a humidity content of 40 gr/lb using standard cooling equipment. This results in a 90 gr/lb reduction at the typical latent design condition of 130 gr/lb, and can be designed and operated to provide air as dry as 35 gr/lb. Providing very dry air using conventional cooling equipment has many advantages including a significant reduction of energy consumption and thereby cost. With very dry air, lower air flow quantities can handle far more latent load.

For example, an office building could reduce energy consumption by operating its VAV air handling systems serving the space with dry cooling coils, allowing the supply air leaving temperature to be set by the controlled space sensible loads. This is possible if the outdoor air volume provided to the VAV air handling system is dehumidified enough to handle both the outdoor air and space latent loads. Because the percentage of outdoor air compared to the total supply air volume of a typical office designed to comply with ASHRAE Standard 62 may only be 15-20%, the outdoor air would need to be very dry if the entire internal latent load is to be handled by the outdoor air volume (dry cooling coils).

SCHOOL APPLICATION

The Pinnacle system is particularly well suited for school classrooms where designers attempt to reduce project first cost by designing for only 7.5 cfm/student in lieu of the recommended 15 cfm/student.

For example, a typical school classroom today contains approximately 30 children. The sensible load associated with the lights, occupants, etc. is approximately 2 tons. The latent load associated with the occupants and infiltration is approximately 4.3 pounds per hour. Assuming the space is to be controlled at 75°F and 50% RH, a humidity content of 65 gr/lb is desired. If the latent load is to be handled with an outdoor air load of 450 cfm (based on 15 cfm/student) then the outdoor air must be delivered at 50 gr/lb (see sidebar for calculation.)

Now, if only 7.5 cfm/student is applied in lieu of the 15 cfm considered previously, then the required moisture differential doubles from the 15 gr/lb previously calculated to 30 gr/lb. Thus, to handle the latent load with 225 cfm of outdoor (7.5 cfm/student) the outdoor air must now be delivered at 35 gr/lb (= 65 gr/lb - 30 gr/lb). This level of dehumidification is generally NOT obtainable with conventional HVAC equipment.

The ability of the Pinnacle system to provide very dry outdoor air is also particularly advantageous where extreme indoor air humidity loads are encountered. For example, at least two times a day the doors to a school facility may be kept open for extended periods of time. Doors are frequently open in the morning when the students arrive and also when they leave for the day. It is very desirable to have excess/reserved latent capacity in the HVAC system in order to bring the indoor conditions back under control. This reserve capacity is particularly important during the morning because the outdoor air infiltrating the building during the cooling mode is typically cool and humid. As a result, little dehumidification will be accomplished by the conventional HVAC systems controlled by space temperature.

The humidity content of the supply air is calculated by dividing the pounds of latent load by the pounds of dry air (4.3 lb. moisture/hr divided by 2,025 lb. outdoor air/hour) to determine the required moisture differential required (in this case a differential of .0021 lb. moisture per lb. of dry air is required or 15 grains). By taking the desired space humidity content (65 grains) and subtracting the calculated moisture differential (15 grains) the required supply condition is calculated (50 grains).

BENEFITS DURING UNOCCUPIED PERIODS
*WHEN EQUIPPED WITH OPTIONAL RECIRCULATION DAMPER

Another advantage offered by the Pinnacle® I System is its ability to control humidity levels in unoccupied facilities which can not be effectively accomplished with current preconditioning technologies.

During unoccupied times, as research has shown, the building materials (e.g., carpeting, furnishings, etc.) act as a moisture sponge as the humidity level rises. This rise in humidity is typical because many building operators reduce the capacity of or cycle off the HVAC system in an attempt to conserve energy. Because the sensible load in unoccupied buildings is minimal, controlling humidity can only be accomplished effectively if reheat is utilized after the air leaves the coils. This reheat capability is seldom designed into projects or utilized if the capability exists.

The Pinnacle® I System can be operated to provide an effective solution to either "dry out" the humidity stored in the building materials or to provide humidity control during unoccupied periods. This is both practical and energy efficient because additional reheat is not required, since it is provided by the passive dehumidification wheel.

The Pinnacle® I System can also reduce the quantity of outdoor air as a function of building occupants, e.g., demand controlled ventilation, as shown in Figure 4. This strategy allows schools to control humidity during the summer vacation with very low airflow rates through the system when compared to the flow volume delivered when the controlled space is occupied. Reducing the flow through the system
results in reduced fan horsepower, reduced chilled water requirements at the cooling coil, increased recovery efficiency at the total energy wheel and the ability to provide drier air from this passive dehumidification wheel.

FIGURE 4 Schematic of the Pinnacle system operating in unoccupied mode. The system can operate in 100% recirculation mode and with very little refrigeration input effectively controlling the indoor humidity.

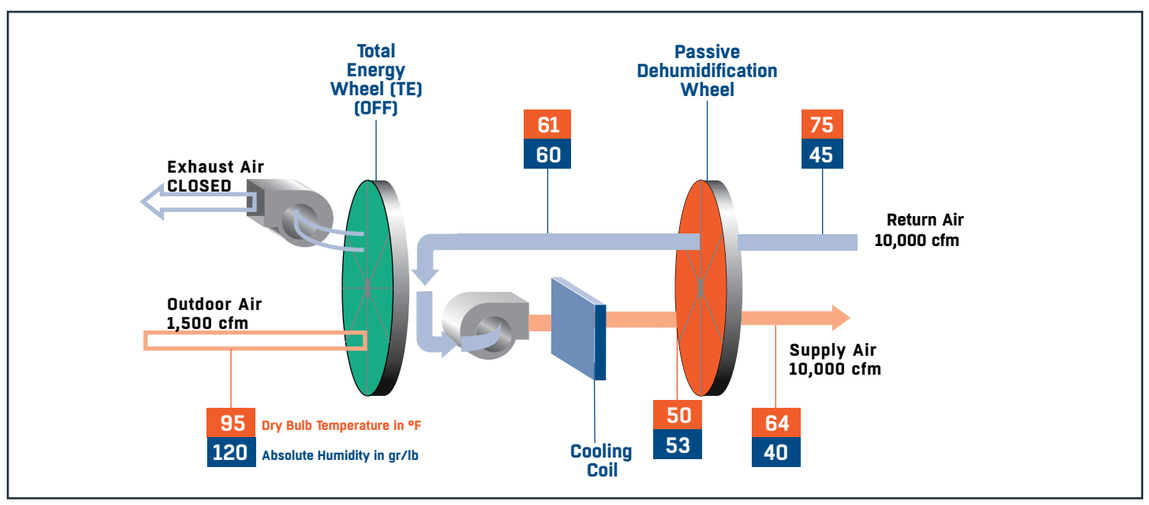

BENEFITS DURING HEATING SEASON

Another advantage of the Pinnacle® I system is that, during the heating mode, both the total energy wheel and the desiccant-based dehumidification wheel can be operated to recover more than 90% of the energy (temperature and humidity.) In most cases, this level of recovery efficiency allows the controlled spaces to be self heating, even on very cold days, once normal lighting and people loads are introduced to the controlled space.

IN SUMMARY

The Pinnacle® I system offers a cost effective solution to the ventilation mandate and the humidity control dilemma facing designers as a result of ASHRAE Standard 62. The system's flexibility allows engineers to consider whole new design schemes. This is a result of its ability to provide very dry outdoor air in a straight forward, simple, energy efficient manner delivered by a totally integrated packaged system.

A very significant reduction in energy consumption during the cooling season is recognized with the Pinnacle® I system when compared to conventional over-cool and reheat designs applied most often today. These reductions are typically in the range of 50 to 60%. With the Pinnacle® I system, winter time heating and humidification is reduced to only 10 to 15% of what it would be without the system. As importantly, the unoccupied dehumidification, made possible with the technology, allows building owners to maintain humidity levels during unoccupied times at a fraction of the cost of alternate systems.

The Pinnacle® I significantly reduces energy consumption for commercial buildings in the US; offsetting the significant energy increase that would otherwise come as a result of the increased compliance with IAQ code requirements (i.e. ASHRAE Standard 62).

SELECTION PROCEDURE

A selection program has been developed to assist in choosing achievable performances for varying building applications. The selction tool allows the user to complete performance modeling for the Pinnacle® I System and supplies the following information:

PERFORMANCE TOOL OUTPUT

PERFORMANCE DATA:

- Space peak latent conditions
- Space peak sensible condition
- Outdoor peak heating conditions

ENERGY SAVINGS ANALYSIS:

- Estimate of the Pinnacle® I System annual cost of operation
- Estimate of the over-cooling/reheat approach annual cost of operation
- ROI/life cycle costs — available upon request

SCHEDULE:

- Pinnacle® I System performance schedule based upon input parameters

SPECIFICATION:

- Pinnacle® I System sample specification

REQUIRED INPUTS

To complete your selection you will need the following information:

AIRFLOW:

The main criterion for basic unit selection is the amount of ventilation air to be processed.

Airflow is determined by the higher value desired between the supply air flow (CFM) and the return air flow (CFM). To determine minimum airflow for the building application review ASHRAE 62.1 airflow recommendation with building load requirements. When the required airflow is available in multiple unit sizes, you should consider the following options:

BOX SIZE OR JOBSITE AREA FOR UNIT

- Smaller units are lighter in weight and take up less project space.

PERFORMANCE

- Larger units have lower face velocities, which results in higher performance.

COST

- Smaller units are less costly to build.

FIGURE 5 System Sizes and Airflow Capacities.

MODEL	AIRFLOW CAPACITY	
PVS - 03	LOW	3,000
	MID	4,000
	HIGH	4,500
PVS - 05	LOW	4,500
	MID	6,000
	HIGH	8,000
PVS - 09	LOW	6,000
	MID	8,000
	HIGH	10,000
PVS - 13	LOW	8,000
	MID	10,000
	HIGH	15,000
PVS - 18	LOW	11,000
	MID	14,000
	HIGH	18,000
PVS - 24	LOW	11,000
	MID	13,000
	HIGH	15,000
PVS- 28	LOW	11,000
	MID	18,500
	HIGH	21,000
PVS - 34	LOW	18,000
	MID	21,000
	HIGH	24,000
PVS - 43	LOW	26,000
	MID	30,000
	HIGH	37,000

UNIT WEIGHTS AND DIMENSIONS

PINNACLE SERIES (PVS)
SIZES 3 - 43

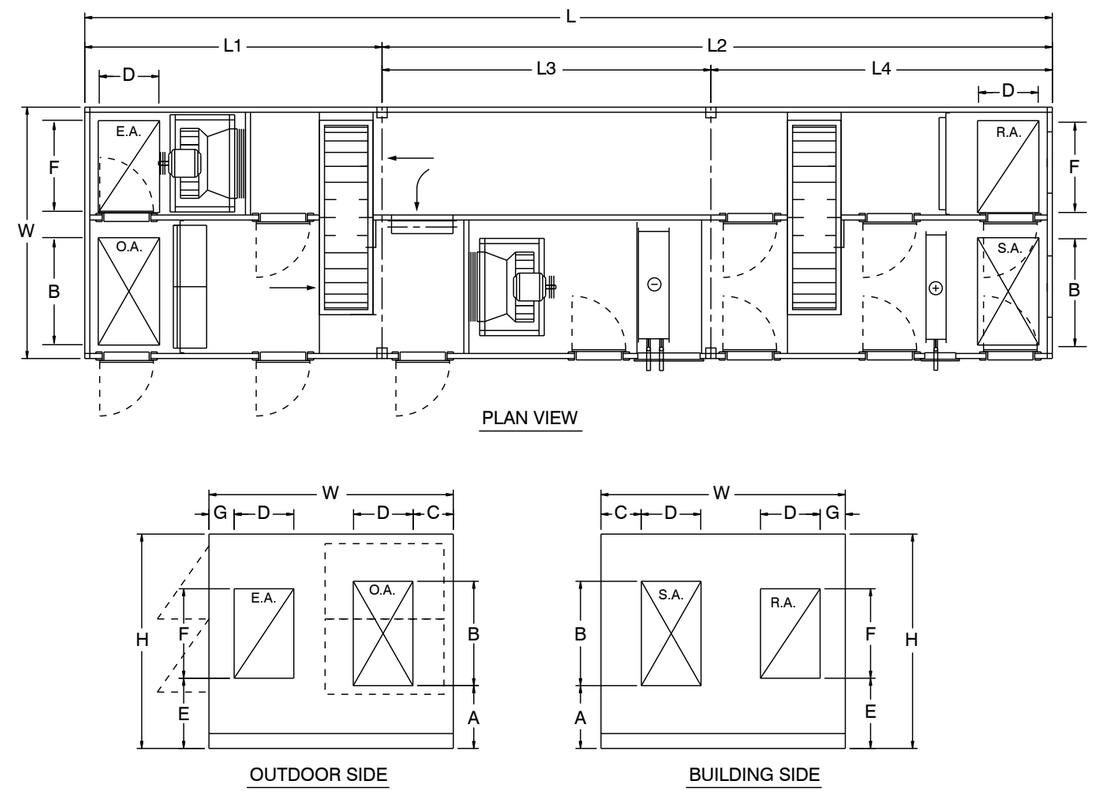

MODEL	W	H	A	B	C	D	E	F	G	WEIGHT L1	WEIGHT L2	WEIGHT L3	L	L1	L2	L3	L4
	IN.	IN.	IN.	IN.	IN.	IN.	IN.	IN.	IN.	LBS.	LBS.	LBS.	IN.	IN.	IN.	IN.	IN.
PVS-03	86.25	48.25	14.25	24.25	12.25	20.00	14.25	24.00	12.25	7,400	0	0	288.5	0.00	0.00	0.00	0.00
PVS-05	86.25	60.25	15.25	34.25	14.25	20.00	20.25	24.00	14.25	8,700	0	0	296.5	0.00	0.00	0.00	0.00
PVS-09	98.25	72.25	15.25	46.25	20.25	20.00	21.25	34.00	14.25	11,000	0	0	304.38	0.00	0.00	0.00	0.00
PVS-13	98.25	86.25	23.25	46.25	17.25	26.00	29.25	34.00	11.25	4,400	9,750	0	333.13	99.63	233.5	0.00	0.00
PVS-18	122.25	98.25	23.25	58.25	23.25	26.00	29.25	46.00	17.25	5,800	12,250	0	348.88	107.5	241.38	0.00	0.00
PVS-24	122.25	110.25	29.25	58.25	20.25	32.00	35.25	46.00	14.25	6,700	14,150	0	364.63	115.38	249.25	0.00	0.00
PVS-28	146.25	122.25	29.25	70.25	26.25	32.00	35.25	58.00	20.25	8,050	8,800	9,950	381.5	119.25	0.00	133.00	129.13
PVS-35	146.25	134.25	35.25	70.25	22.75	37.00	41.25	58.00	16.75	9,200	9,950	11,050	401.13	129.13	0.00	137.00	135.00
PVS-43	182.25	146.25	29.25	94.25	32.25	44.00	41.25	70.00	20.25	11,800	11,800	13,650	417	137.00	0.00	139.00	141.00

UNIT WEIGHTS AND DIMENSIONS

PINNACLE SERIES WITH POST HEAT (PVSH)
SIZES 3 - 28

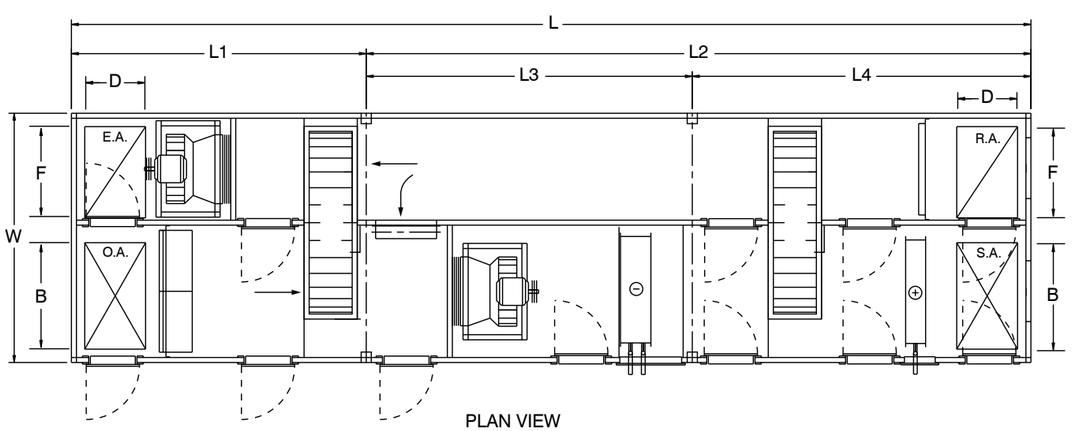

PLAN VIEW

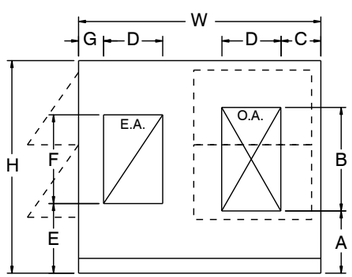

OUTDOOR SIDE

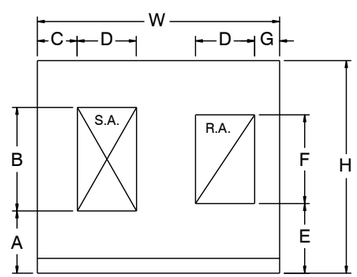

BUILDING SIDE

MODEL	W	H	A	B	C	D	E	F	G	WEIGHT L1	WEIGHT L2	WEIGHT L3	L	L1	L2	L3	L4
	IN.	IN.	IN.	IN.	IN.	IN.	IN.	IN.	IN.	LBS.	LBS.	LBS.	IN.	IN.	IN.	IN.	IN.
PVSH-03	86.00	48.00	14.00	24.00	12.00	20.00	14.00	24.00	12.00	7,250	0	0	308.00	0.00	0.00	0.00	0.00
PVSH-05	86.00	60.00	15.00	34.00	14.00	20.00	20.00	24.00	14.00	9,100	0	0	316.00	0.00	0.00	0.00	0.00
PVSH-09	98.00	72.00	15.00	46.00	20.00	20.00	21.00	34.00	14.00	4,800	6,600	0	329.00	115.00	214.00	0.00	0.00
PVSH-13	98.00	86.00	23.00	46.00	17.00	26.00	29.00	34.00	11.00	6,000	8,800	0	359.00	121.00	237.00	0.00	0.00
PVSH-18	122.00	98.00	23.00	58.00	23.00	26.00	29.00	46.00	17.00	7,750	5,350	6,150	380.00	129.00	0.00	131.00	119.00
PVSH-24	122.00	110.00	29.00	58.00	20.00	32.00	35.00	46.00	14.00	9,050	6,050	7,000	395.00	137.00	0.00	133.00	125.00
PVSH-28	146.00	122.00	29.00	70.00	26.00	32.00	35.00	58.00	20.00	11,600	7,150	8,000	407.00	143.00	0.00	137.00	127.00

UNIT WEIGHTS AND DIMENSIONS (PVSH 35 - 43)

PINNACLE SERIES WITH POST HEAT (PVSH)
SIZES 35 - 43

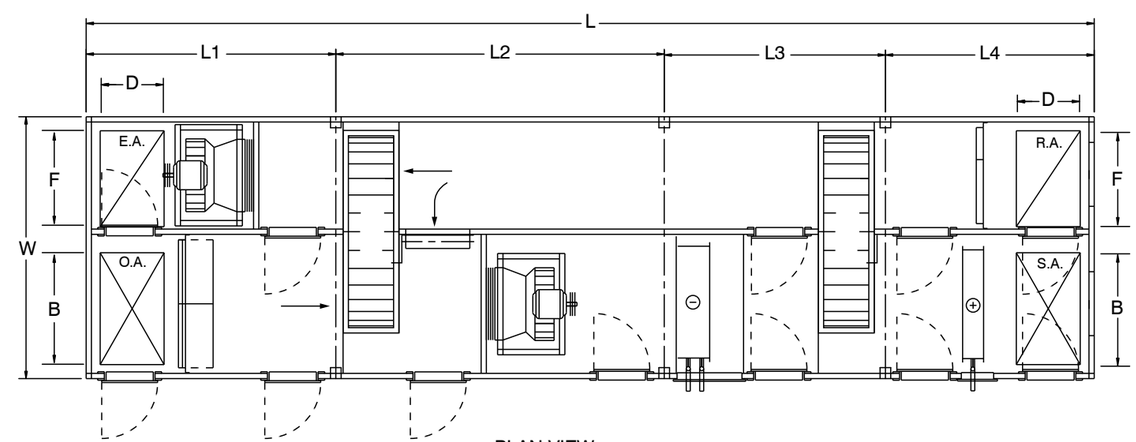

PLAN VIEW

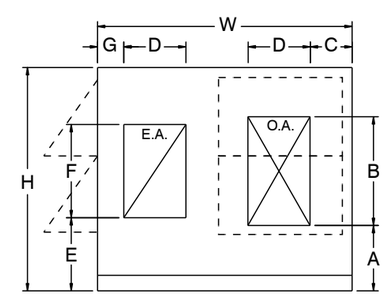

OUTDOOR SIDE

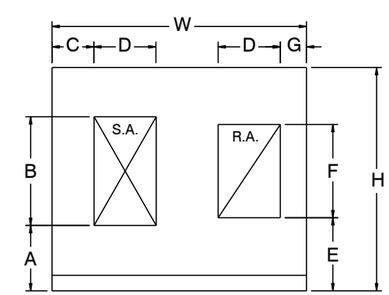

BUILDING SIDE

MODEL	W	H	A	B	C	D	E	F	G	WEIGHT L1	WEIGHT L2	WEIGHT L3	WEIGHT L4	L	L1	L2	L3	L4
	IN.	IN.	IN.	IN.	IN.	IN.	IN.	IN.	IN.	LBS.	LBS.	LBS.	LBS.	IN.	IN.	IN.	IN.	IN.
PVSH-35	146.00	134.00	35.00	70.00	23.00	37.00	41.00	58.00	17.00	9,200	9,950	7,050	5,500	432.00	129.00	137.00	82.00	84.00
PVSH-43	182.00	146.00	29.00	94.00	32.00	44.00	41.00	70.00	20.00	11,800	11,800	8,400	7,050	448.00	137.00	139.00	82.00	90.00

MOUNTING DETAILS, CURB SUPPORT

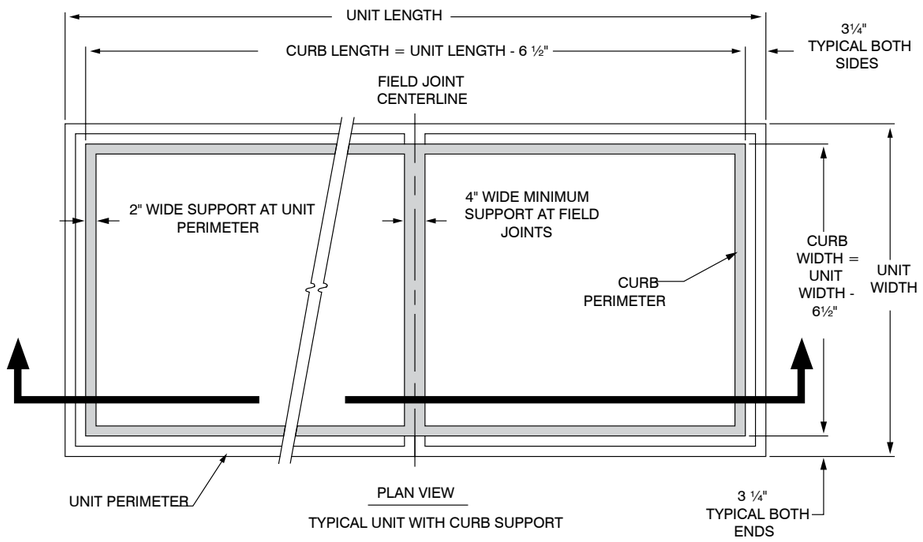

PLAN VIEW

TYPICAL UNIT WITH CURB SUPPORT

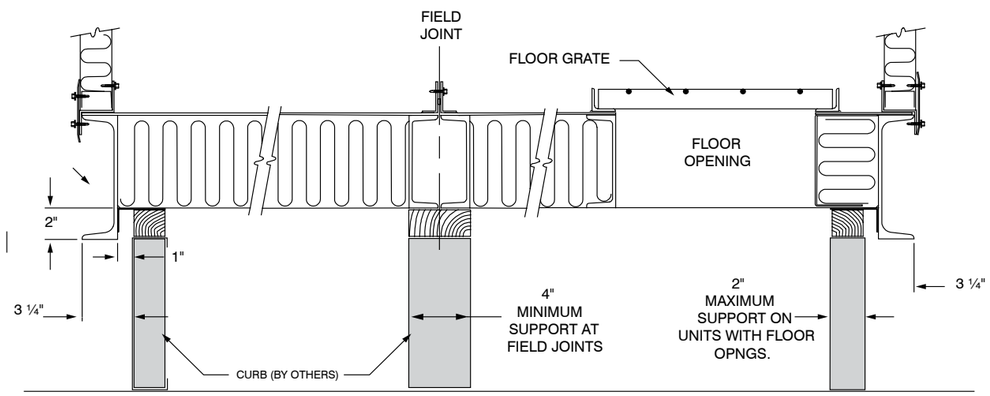

SECTION

SELF FLASHING UNIT BASE
SHOWING CURB SUPPORT REQUIREMENTS

NOTES

1. ROOF CURB SHOULD BE SIZED TO ALLOW UNIT TO HANG OVER CURB.
2. CURB SIZE:
   WIDTH = UNIT WIDTH - 6.5"
   LENGTH = UNIT LENGTH -6.5"
3. UNIT SUPPORT IS REQUIRED AROUND THE ENTIRE PERIMETER AND ALONG BOTH SIDES OF ANY FIELD JOINTS.
4. WHEN UNITS REQUIRE FIELD JOINTS, SUPPORT SHOULD BE LEVEL TO 1/16" BETWEEN FIELD JOINTS.

MOUNTING DETAILS, GRID OR PAD SUPPORT

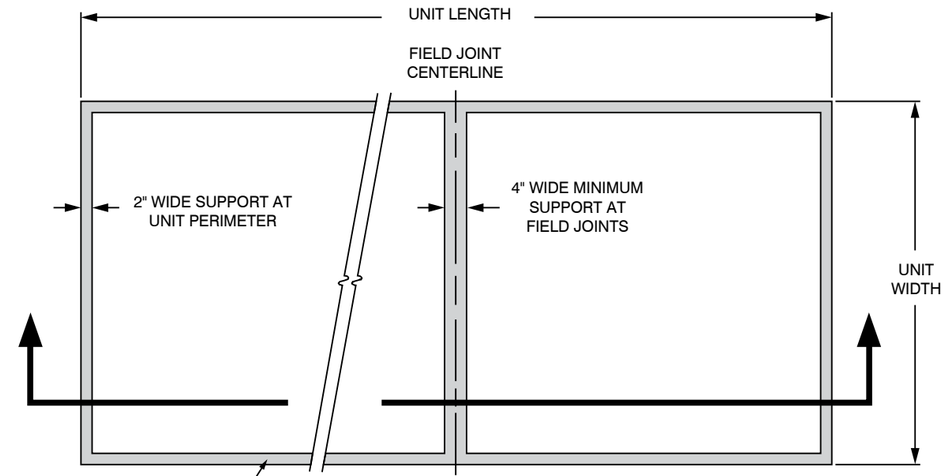

PLAN VIEW

TYPICAL UNIT WITH HOUSEKEEPING PAD
OR STRUCTURAL GRID SUPPORT

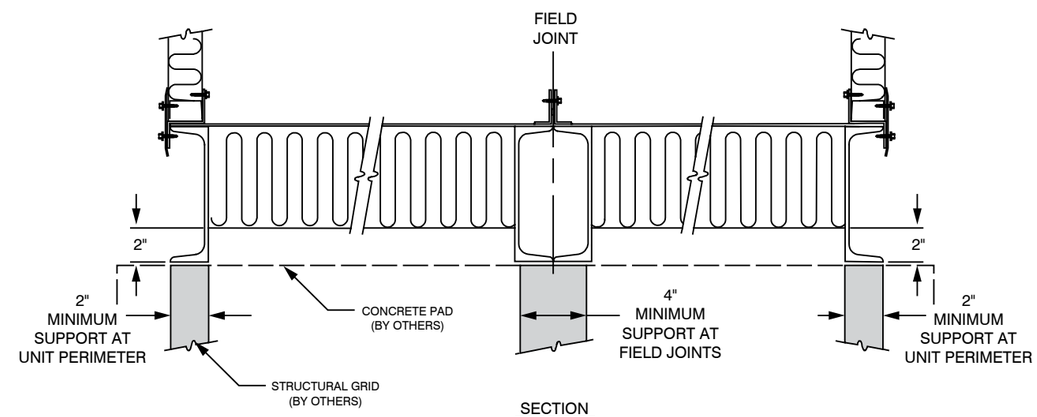

SECTION

UNIT BASE WHEN MOUNTING
ON PAD OR STRUCTURAL GRID

NOTES

1. UNIT SUPPORT IS REQUIRED AROUND THE ENTIRE PERIMETER AND ALONG BOTH SIDES OF ANY FIELD JOINTS.
2. WHEN UNITS REQUIRE FIELD JOINTS, SUPPORT SHOULD BE LEVEL TO 1/16" BETWEEN FIELD JOINTS.

ELECTRICAL DATA

HP	3 PHASE FULL LOAD AMPS			MINIMUM EFFICIENCY STANDARD MOTORS	MINIMUM EFFICIENCY HIGH EFF. MOTORS
	208 V	240 V	480 V		
1/6	0.6	0.6	0.3	—	—
1/4	1.0	1.0	0.5	—	—
1/2	2.4	2.2	1.1	—	—
3/4	3.5	3.2	1.6	73	—
1	4.6	4.2	2.1	76.6	82.5
1-1/2	6.6	6.0	3.0	80	84
2	7.5	6.8	3.4	79.9	84
3	10.6	9.6	4.8	83.1	86.5
5	16.7	15.2	7.6	83.4	87.5
7-1/2	24.2	22	11	86.6	88.5
10	30.8	28	14	88.2	89.5
15	46.2	42	21	89.3	90.2
20	59.4	54	27	90.4	91
25	74.8	68	34	90.5	92.4
30	88.0	80	40	89.3	93
40	114	104	52	90	93
50	—	130	65	91.2	94.1
60	—	—	77	92	93.6
75	—	—	96	92.4	94.1
100	—	—	124	92.5	94.1

HP	3Ø VARIABLE FREQUENCY DRIVE			YASKAWA MODEL #
	208 V	280 V	480 V	
1	7.3	7.3	—	CIMR-VU-2A0006FAA
1	—	—	2.1	CIMR-VU-4A0002FAA

SIZE	CONTROL POWER TRANSFORMER		
	208 V	240 V	480 V
150 VA	0.7	0.6	0.4
500 VA	2.4	2.0	1.0
2 KVA	14.4	13.0	6.25

NOTE: All Pinnacle® units have SCCR 10K

To determine minimum circuit ampacity, add the FLA's for each fan motor, the FLA of the constant speed wheel motor or the variable frequency drive. Then add the CPT amps and 25 percent of the largest motor FLA.

Fuse recommendations: size fuses at the unit FLA and 75% of the largest motor FLA, then select the next larger size dual-element, time-delay fuses (LOW-PEAK®, FUSETRON® or equivalent). If the fuses don't hold, consult N.E.C. for suitability of larger sized fuses.

Use a 3 KVA transformer for units with line side 120 volt lights. Otherwise use the 180 VA transformer.

COMPONENT PRESSURE DROP TABLES

DUAL WHEEL UNIT PRESSURE DROPS

SIZE	PVS-3			PVS-5			PVS-9		
CFM	2,000	2,500	3,000	3,000	4,000	4,500	4,500	6,000	8,000
TE WHEEL PURGE	582	582	582	786	786	786	1,027	1,027	1,027
PD WHEEL PURGE	280	280	280	357	357	357	444	444	444
SUPPLY FAN CFM	2,000	2,500	3,000	3,000	4,000	4,500	4,500	6,000	8,000
EXHAUST FAN CFM	3,742	4,754	5,262	4,005	5,005	5,505	5,778	7,278	9,278
OA OPENING	0.02	0.02	0.04	0.01	0.02	0.03	0.01	0.02	0.03
EA OPENING	0.04	0.06	0.08	0.09	0.14	0.17	0.08	0.13	0.21
RA OR EA OPENING	0.12	0.17	0.23	0.11	0.17	0.21	0.10	0.16	0.27
SA OR OA OPENING	0.06	0.10	0.14	0.06	0.11	0.14	0.05	0.08	0.14
DAMPER	0.09	0.12	0.16	0.06	0.09	0.11	0.06	0.10	0.15
OA FILTER	0.45	0.33	0.60	0.46	0.30	0.56	0.35	0.22	0.57
RA FILTER	0.17	0.26	0.37	0.17	0.30	0.37	0.27	0.49	0.87
TE WHEEL	0.82	1.07	1.35	0.59	0.82	0.95	0.53	0.73	1.04
PD WHEEL	0.69	0.92	1.18	0.52	0.74	0.86	0.48	0.67	0.97
COOLING COIL	0.34	0.50	0.70	0.39	0.65	0.81	0.30	0.51	0.87
MAIN HEATING COIL	0.06	0.08	0.11	0.06	0.11	0.13	0.10	0.16	0.28
MISC. LOSSES	0.30	0.30	0.30	0.30	0.30	0.30	0.30	0.30	0.30
SIZE	**PVS-13**			**PVS-18**			**PVS-24**		
CFM	6,000	8,000	10,000	8,000	10,000	15,000	11,000	14,000	18,000
TE WHEEL PURGE	1,329	1,329	1,329	1,646	1,646	1,646	1,992	1,992	1,992
PD WHEEL PURGE	552	552	552	662	662	662	781	781	781
SUPPLY FAN CFM	6,000	8,000	10,000	8,000	10,000	15,000	11,000	14,000	18,000
EXHAUST FAN CFM	7,620	9,620	11,620	9,977	11,977	16,977	13,366	16,366	20,366
OA OPENING (WITH HOOD)	0.01	0.02	0.03	0.01	0.01	0.02	0.01	0.02	0.03
EA OPENING (WITH HOOD)	0.09	0.14	0.20	0.08	0.12	0.24	0.10	0.15	0.23
RA OR EA OPENING	0.10	0.16	0.23	0.10	0.14	0.28	0.11	0.17	0.26
SA OR OA OPENING	0.05	0.08	0.13	0.04	0.06	0.14	0.05	0.08	0.13
DAMPER	0.06	0.10	0.15	0.05	0.07	0.14	0.06	0.09	0.14
OA FILTER	0.43	0.27	0.62	0.31	0.22	0.62	0.44	0.30	0.69
RA FILTER	0.30	0.52	0.82	0.22	0.34	0.76	0.31	0.51	0.84
TE WHEEL	0.46	0.61	0.80	0.44	0.54	0.88	0.45	0.58	0.78
PD WHEEL	0.42	0.57	0.75	0.41	0.51	0.83	0.42	0.55	0.74
COOLING COIL	0.35	0.60	0.91	0.26	0.40	0.87	0.37	0.58	0.94
MAIN HEATING COIL	0.11	0.19	0.29	0.07	0.11	0.15	0.10	0.16	0.25
MISC. LOSSES	0.30	0.30	0.30	0.30	0.30	0.30	0.30	0.30	0.30
SIZE	**PVS-28**			**PVS-35**			**PVS-43**		
CFM	15,000	18,500	23,000	18,000	22,500	27,000	26,000	30,000	40,000
TE WHEEL PURGE	2,257	2,257	2,257	2,654	2,654	2,654	3,088	3,088	3,088
PD WHEEL PURGE	871	871	871	1,006	1,006	1,006	1,151	1,151	1,151
SUPPLY FAN CFM	15,000	18,500	23,000	18,000	22,500	27,000	26,000	30,000	40,000
EXHAUST FAN CFM	17,662	21,162	25,662	21,105	25,605	30,105	29,584	33,584	43,584
OA OPENING (WITH HOOD)	0.01	0.02	0.03	0.01	0.02	0.03	0.01	0.02	0.03
EA OPENING (WITH HOOD)	0.10	0.15	0.23	0.12	0.17	0.24	0.11	0.15	0.24
RA OR EA OPENING	0.12	0.18	0.26	0.12	0.18	0.25	0.12	0.16	0.27
SA OR DA OPENING	0.06	0.09	0.15	0.06	0.10	0.14	0.06	0.08	0.14
DAMPER	0.07	0.10	0.15	0.07	0.10	0.14	0.09	0.12	0.20
OA FILTER	0.41	0.28	0.60	0.48	0.33	0.67	0.39	0.30	0.65
RA FILTER	0.30	0.45	0.69	0.34	0.54	0.77	0.41	0.55	0.98
TE WHEEL	0.52	0.65	0.85	0.50	0.63	0.79	0.59	0.70	1.01
PD WHEEL	0.49	0.62	0.81	0.47	0.60	0.75	0.56	0.67	0.98
COOLING COIL	0.37	0.55	0.84	0.42	0.65	0.92	0.38	0.50	0.87
MAIN HEATING COIL	0.09	0.13	0.20	0.10	0.16	0.22	0.11	0.15	0.26
MISC. LOSSES	0.30	0.30	0.30	0.30	0.30	0.30	0.30	0.30	0.30

Filter pressure drops based on 2 inches thick, 30% efficient Class II filter.

Cooling coil pressure drops based on 6 row, 10 fins per inch single-circuited coil.

Heating coil pressure drops based on 1 row, 6 fins per inch.

Purge volumes based on 4 inches P_{OA}-P_{RA} for enthalpy wheel and 1 inch for PD wheel.

Casing losses include fan inlet losses.

ELECTRICAL SCHEMATIC EXAMPLE

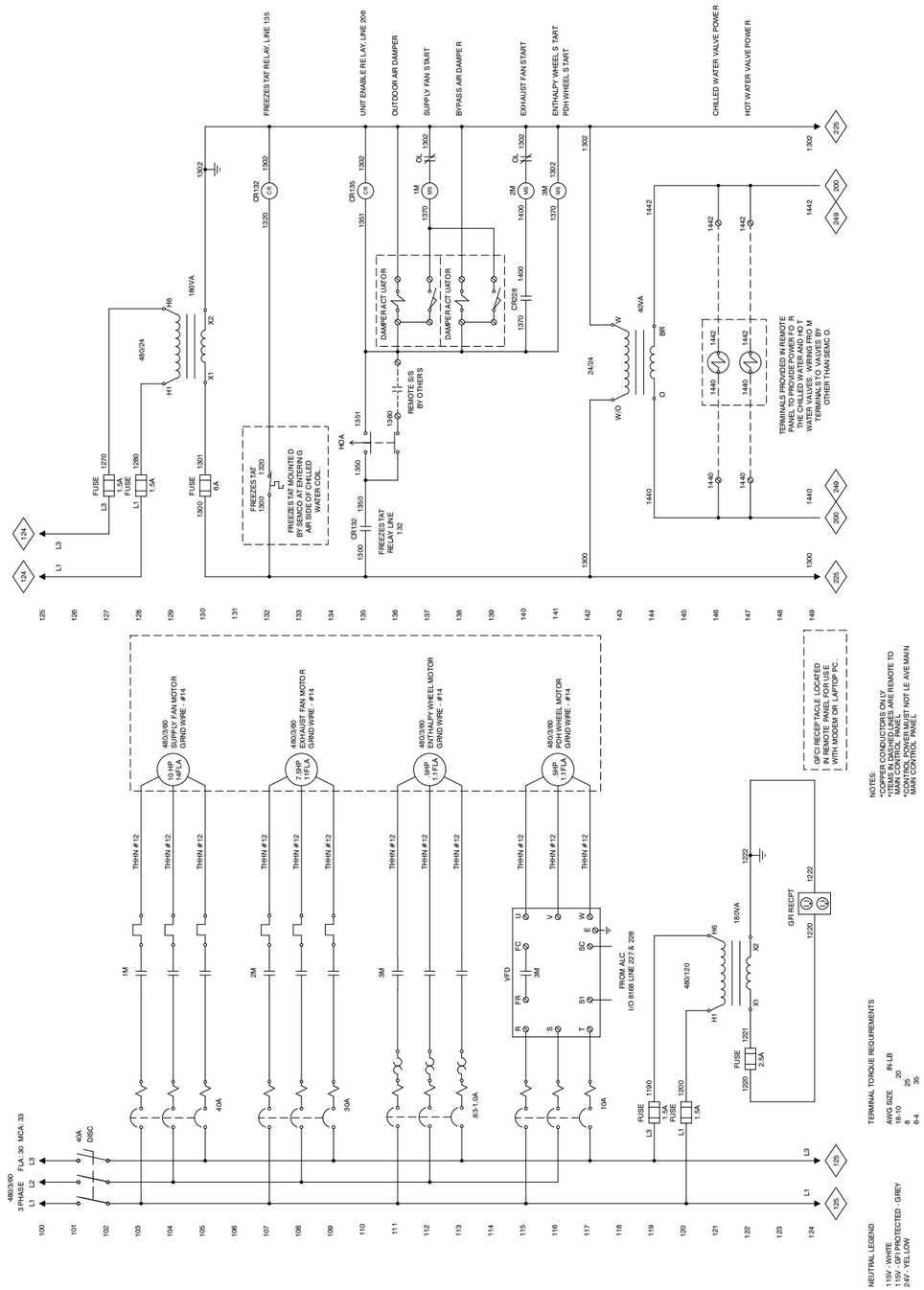

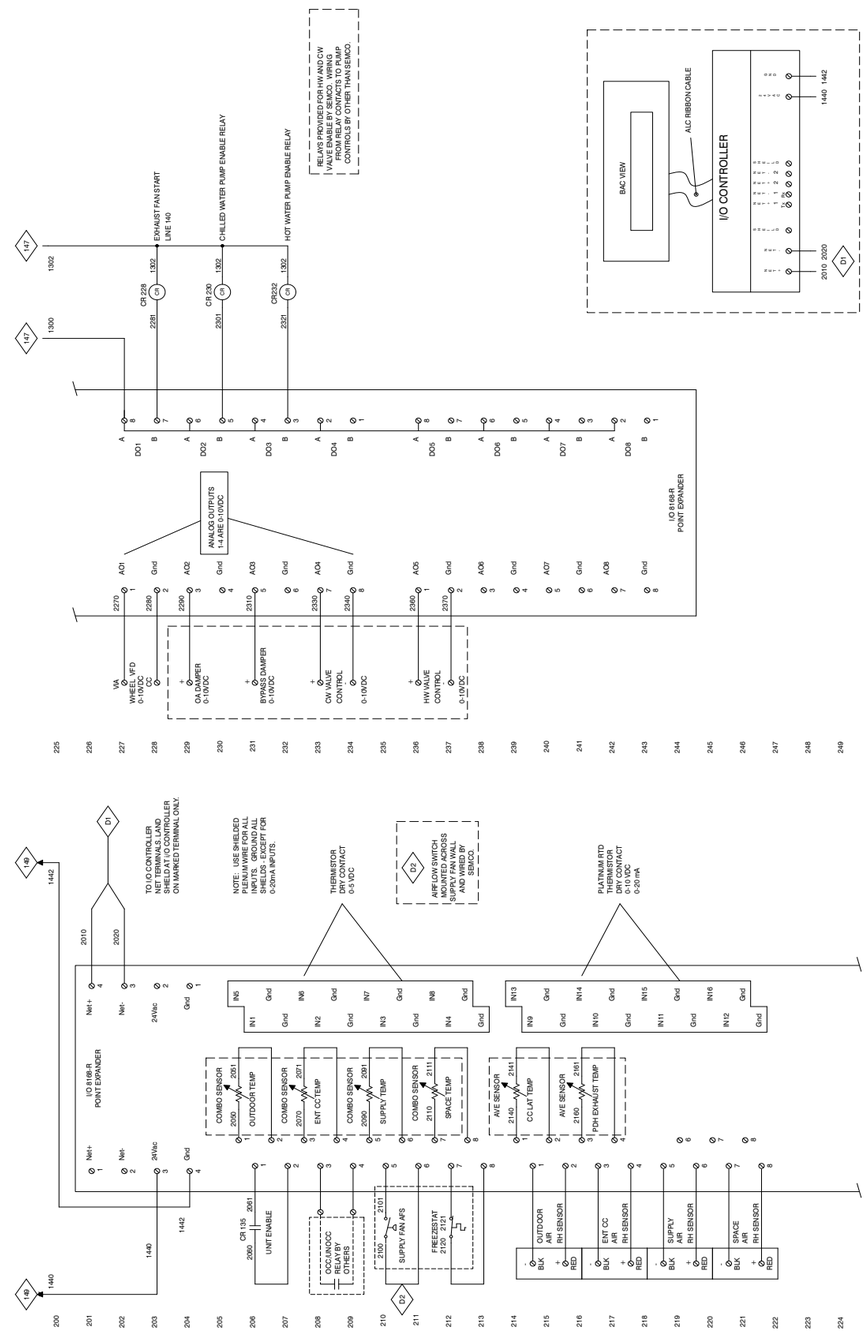

FAN DATA

Max motor size assumes the motor is mounted on top of the fan. A larger motor may be provided by mounting the motor and the fan on a common base. This will add length to the unit. Underlined variables indicates maximum static efficiency per class.

SIZE 3

MAXIMUM 5 HP MOTOR

	STATIC PRESSURE IN INCHES OF WATER																			
	1" SP		2" SP		3" SP		4" SP		5" SP		6" SP		7" SP		8" SP		10" SP		12" SP	
CFM	RPM	BHP	RPM	BHP	RPM	BHP	RPM	BHP	RPM	BHP	RPM	BHP	RPM	BHP	RPM	BHP	RPM	BHP	RPM	BHP
1,100	1,387	0.26																		
1,200	1,430	0.28	1 ,855	0.59																
1,300	1,479	0.31	1,874	0.62																
1,400	1,530	0.34	1,903	0.66																
1,500	1,582	0.37	1,939	0.70	2,276	1.10														
1,600	1,635	0.40	1,979	0.75	2,297	1.15														
1,700	1,689	0.43	2,024	0.80	2,326	1.21	2,623	1.66												
1,800	1,745	0.46	2,072	0.85	2,361	1.27	2,641	1.73												
1,900	1,802	0.50	2,123	0.91	2,400	1.33	2,667	1.81	2,933	2.33										
2,000	1,861	0.54	2,174	0.97	2,441	1.40	2,698	1.89	2,949	2.41										
2,100	1,921	0.58	2,227	1.03	2,487	1.48	2,734	1.97	2,974	2.50	3,215	3.08								
2,200	1,983	0.62	2,279	1.09	2,535	1.56	2,773	2.06	3,005	2.60	3,233	3.18								
2,300	2,046	0.67	2,332	1.15	2,586	1.65	2,815	2.15	3,039	2.70	3,258	3.29	3,477	3.91						
2,400	2,110	0.71	2,387	1.21	2,637	1.73	2,860	2.25	3,077	2.81	3,288	3.40	3,497	4.03	3,710	4.71				
2,500	2,175	0.77	2,442	1.28	2,689	1.82	2,908	2.36	3,117	2.92	3,322	3.53	3,524	4.16	3,725	4.84				
2,600	2,240	0.82	2,498	1.34	2,742	1.91	2,958	2.47	3,160	3.04	3,360	3.66	3,554	4.30	3,747	4.98				
2,700	2,306	0.88	2,556	1.42	2,974	2.00	3,009	2.59	3,205	3.17	3,399	3.79	3,589	4.45	3,775	5.13	4,149	6.60		
2,800	2,372	0.94	2,615	1.49	2,847	2.09	3,060	2.70	3,254	3.30	3,440	3.93	3,626	4.60	3,806	5.29	4,165	6.77		
2,900	2,438	1.00	2,675	1.57	2,901	2.18	3,112	2.82	3,303	3.44	3,485	4.08	3,665	4.75	3,841	5.45	4,188	6.95		
3,000	2,505	1.07	2,736	1.65	2,956	2.28	3,165	2.94	3,354	3.58	3,531	4.23	3,706	4.91	3,878	5.62	4,215	7.13	4,551	8.76
3,100	2,572	1.14	2,798	1.74	3,012	2.38	3,217	3.06	3,406	3.73	3,580	4.40	3,749	5.08	3,918	5.81	4,246	7.33	4,570	8.97
3,200	2,640	1.22	2,861	1.83	3,069	2.49	3,270	3.18	3,458	3.88	3,630	4.56	3,795	5.26	3,959	5.99	3,874	17.84	4,593	9.18

CLASS I = MAX. 2,371 RPM CLASS II = MAX. 3,082 RPM CLASS III = MAX. 3,913 RPM APF181

SIZE 5

MAXIMUM 10 HP MOTOR

	STATIC PRESSURE IN INCHES OF WATER																			
	1" SP		2" SP		3" SP		4" SP		5" SP		6" SP		7" SP		8" SP		10" SP		12" SP	
CFM	RPM	BHP	RPM	BHP	RPM	BHP	RPM	BHP	RPM	BHP	RPM	BHP	RPM	BHP	RPM	BHP	RPM	BHP	RPM	BHP
1,400	1,024	0.33																		
1,700	1,052	0.38																		
2,000	1,116	0.45	1,449	0.93																
2,300	1,191	0.53	1,473	1.03																
2,600	1,268	0.61	1,526	1.16	1,783	1.78														
2,900	1,351	0.71	1,596	1.30	1,816	1.94	2,052	2.67												
3,200	1,439	0.82	1,671	1.46	1,872	2.13	2,077	2.88	2,292	3.70										
3,500	1,531	0.95	1,747	1.63	1,942	2.35	2,122	3.11	2,314	3.95	2,511	4.86								
3,800	1,626	1.09	1,827	1.81	2,017	2.59	2,185	3.38	2,353	4.23	2,531	5.15	2,713	6.14	2,893	7.20				
4,100	1,722	1.25	1,910	2.00	2,092	2.83	2,257	3.68	2,410	4.55	2,568	5.49	2,734	6.49	2,902	7.55				
4,400	1,820	1.43	1,998	2.22	2,169	3.09	2,332	4.00	2,479	4.92	2,621	5.86	2,769	6.88	2,924	7.95	3,236	10.27		
4,700	1,920	1.63	2,088	2.46	2,250	3.36	2,407	4.32	2,552	5.30	2,687	6.28	2,820	7.30	2,960	8.40	3,252	10.74	3,543	13.30
5,000	2,020	1.85	2,181	2.73	2,334	3.66	2,484	4.66	2,627	5.70	2,759	6.73	2,885	7.79	3,010	8.88	3,277	11.25	3,553	13.82
5,300	2,121	2.09	2,275	3.01	2,420	3.98	2,563	5.02	2,702	6.10	2,834	7.21	2,956	8.31	3,074	9.43	3,316	11.82	3,573	14.42
5,600	2,224	2.36	2,371	3.32	2,510	4.33	2,646	5.40	2,780	6.53	2,908	7.68	3,030	8.85	3,144	10.02	3,368	12.44	3,604	15.07
5,900	2,327	2.65	2,469	3.66	2,602	4.71	2,731	5.81	2,859	6.97	2,984	8.18	3,104	9.40	3,217	10.63	3431	13.12	3,647	15.76
6,200	2,430	2.97	2,567	4.02	2,695	5.12	2,818	6.25	2,941	7.45	3,062	8.70	3,179	9.97	3,292	11.26	3,500	13.84	3,702	16.52
6,500	2,535	3.31	2,666	4.41	2,790	5.55	2,908	6.72	3,025	7.95	3,142	9.24	3,256	10.56	3,367	11.91	3,573	14.60	3,766	17.34
6,800	2,639	3.69	2,766	4.83	2,886	6.02	3,000	7.23	3,112	8.49	3,224	9.81	3,335	11.18	3,443	12.57	3,648	15.40	3,836	18.22
7,100	2,745	4.09	2,866	5.28	2,983	6.51	3,093	7.76	3,201	9.06	3,308	10.41	3,415	11.81	3,520	13.25	3,722	16.18	3,909	19.13
7,400	2,850	4.53	2,968	5.76	3,080	7.03	3,188	8.34	3,292	9.67	3,395	11.05	3,498	12.49	3,600	13.97	3,798	17.01		
7,700	2,956	5.00	3,070	6.28	3,179	7.59	3,283	8.94	3,384	10.31	3,484	11.74	3,582	13.19	3,681	14.71	3,874	17.84		

CLASS I = MAX. 2,371 RPM CLASS II = MAX. 3,082 RPM CLASS III = MAX. 3,913 RPM APF181

SIZE 5X

MAXIMUM 10 HP MOTOR

	STATIC PRESSURE IN INCHES OF WATER																			
	1" SP		2" SP		3" SP		4" SP		5" SP		6" SP		7" SP		8" SP		10" SP		12" SP	
CFM	RPM	BHP	RPM	BHP	RPM	BHP	RPM	BHP	RPM	BHP	RPM	BHP	RPM	BHP	RPM	BHP	RPM	BHP	RPM	BHP
1,800	925	0.41																		
2,150	956	0.48																		
2,500	1,013	0.56	1,307	1.15																
2,850	1,077	0.65	1,330	1.28	1,597	2.03														
3,200	1,143	0.75	1,375	1.42	1,607	2.19														
3,550	1,214	0.87	1435	1.59	1,634	2.38	1,849	3.27												
3,900	1,288	0.99	1499	1.78	1,681	2.60	1,869	3.51	2,065	4.52										
4,250	1,367	1.14	1,564	1.97	1,740	2.85	1,905	3.78	2,081	4.81	2,261	5.92								
4,600	1,447	1.30	1,631	2.18	1,804	3.13	1,957	4.09	2,112	5.13	2,277	6.27	2,443	7.48						
4,950	1,529	1.49	1,702	2.40	1,868	3.41	2,017	4.43	2,157	5.49	2,304	6.64	2,458	7.87	2,612	9.17				
5,300	1,613	1.69	1,775	2.65	1,933	3.70	2,081	4.80	2,214	5.90	2,346	7.07	2,484	8.31	2,628	9.63	2,915	12.48		
5,650	1,697	1.91	1,852	2.92	2,001	4.01	2,144	5.17	2,276	6.35	2,399	7.54	2,523	8.79	2,654	10.12	2,925	13.00		
6,000	1,783	2.16	1,930	3.22	2,071	4.35	2,209	5.56	2,340	6.81	2,459	8.05	2,575	9.33	2,693	10.68	2,943	13.58	3,197	16.73
6,350	1,869	2.43	2,011	3.54	2,144	4.71	2,276	5.96	2,404	7.28	2,522	8.59	2,633	9.91	2,742	11.28	2,971	14.22	3,211	17.40
6,700	1,956	2.73	2,092	3.89	2,220	5.11	2,345	6.39	2,469	7.76	2,586	9.15	2,696	10.54	2,800	11.94	3,009	14.90	3,233	18.13
7,050	2,044	3.06	2,175	4.27	2,297	5.53	2,417	6.86	2,535	8.26	2,650	9.71	2,759	11.18	2,861	12.64	3,058	15.65	3,264	18.91
7,400	2,132	3.41	2,258	4.67	2,376	5.98	2,490	7.35	2,604	8.80	2,716	10.31	2,823	11.84	2,925	13.38	3,115	16.47	3,304	19.73
7,750	2,220	3.78	2,342	5.10	2,456	6.46	2,566	7.88	2,675	9.36	2,783	10.92	2,888	12.51	2,989	14.12	3,176	17.34	3,354	20.64
8,100	2,310	4.20	2,427	5.57	2,537	6.98	2,643	8.44	2,748	9.97	2,851	11.55	2,954	13.20	3,053	14.88	3,238	18.23	3,411	21.63
8,450	2,399	4.64	2,512	6.06	2,620	7.53	2,722	9.04	2,822	10.60	2,922	12.23	3,021	13.92	3,118	15.65	3,302	19.15	3,472	22.68
8,800	2,489	5.12	2,598	6.59	2,703	8.12	2,802	9.67	2,899	11.28	2,994	12.94	3,090	14.67	3,184	16.44	3,366	20.09		
9,150	2,579	5.63	2,685	7.16	2,786	8.73	2,883	10.35	2,976	11.99	3,069	13.70	3,161	15.46	3,252	17.28	3,430	21.03		

CLASS I = MAX. 2,135 RPM RPMCLASS II = MAX. 2,775 RPM CLASS III = MAX. 3,522 RPM APF201

SIZE 9, 5XX

MAXIMUM 20 HP MOTOR

	STATIC PRESSURE IN INCHES OF WATER																			
	1" SP		2" SP		3" SP		4" SP		5" SP		6" SP		7" SP		8" SP		10" SP		12" SP	
CFM	RPM	BHP	RPM	BHP	RPM	BHP	RPM	BHP	RPM	BHP	RPM	BHP	RPM	BHP	RPM	BHP	RPM	BHP	RPM	BHP
2,000																				
2,500	836	0.56																		
3,000	885	0.67	1,162	1.41																
3,500	949	0.80	1,180	1.57																
4,000	1,016	0.94	1,223	1.78	1,432	2.74														
4,500	1,087	1.10	1,284	2.02	1,460	3.01	1,649	4.14												
5,000	1,164	1.29	1,349	2.29	1,510	3.34	1,672	4.49	1,843	5.76										
5,500	1,243	1.50	1,415	2.57	1,571	3.71	1,713	4.88	1,864	6.19	2,020	7.60	2,175	9.13						
6,000	1,326	1.75	1,484	2.87	1,636	4.10	1,770	5.35	1,901	6.67	2,040	8.10	2,183	9.63	2,325	11.27				
6,500	1,410	2.03	1,558	3.21	1,701	4.51	1,833	5.86	1,954	7.23	2,076	8.68	2,205	10.24	2,337	11.89				
7,000	1,495	2.34	1,634	3.59	1,769	4.95	1,898	6.39	2,016	7.85	2,127	9.33	2,240	10.90	2,360	12.58	2,605	16.18		
7,500	1,581	2.68	1,714	4.01	1,840	5.42	1,964	6.95	2,080	8.50	2,187	10.06	2,290	11.65	2,397	13.36	2,622	17.01	2,850	20.97
8,000	1,668	3.07	1,795	4.47	1,914	5.94	2,031	7.52	2,145	9.17	2,251	10.84	2,349	12.49	2,446	14.20	2,650	17.91	2,863	21.90
8,500	1,757	3.50	1,877	4.96	1,990	6.50	2,101	8.13	2,211	9.87	2,315	11.62	2,413	13.40	2,505	15.16	2,690	18.90	2,886	22.95
9,000	1,846	3.97	1,961	5.51	2,069	7.12	2,174	8.80	2,279	10.60	2,380	12.44	2,477	14.31	2,568	16.18	2,741	19.98	2,920	24.09
9,500	1,935	4.49	2,046	6.11	2,149	7.78	2,250	9.54	2,349	11.37	2,447	13.29	2,542	15.25	2,633	17.24	2,800	21.18	2,965	25.32
10,000	2,025	5.05	2,131	6.74	2,231	8.50	2,327	10.31	2,422	12.21	2,516	14.19	2,608	16.22	2,697	18.29	2,863	22.44	3,019	26.67
10,500	2,116	5.67	2,218	7.44	2,314	9.26	2,406	11.14	2,497	13.10	2,587	15.13	2,676	17.24	2,763	19.40	2,928	23.76	3,079	28.12
11,000	2,207	6.35	2,305	8.19	2,398	10.09	2,487	12.04	2,574	14.06	2,660	16.14	2,745	18.30	2,830	20.54	2,992	25.08	3,142	29.64
11,500	2,298	7.07	2,392	8.99	2,483	10.97	2,569	13.00	2,652	15.06	2,735	17.22	2,817	19.43	2,898	21.71	3,057	26.43		
12,000	2,390	7.86	2,481	9.86	2,568	11.91	2,651	14.00	2,732	16.14	2,811	18.34	2,890	20.61	2,969	22.97	3,124	27.85		
9,150	2,482	8.71	2,569	10.78	2,654	12.91	2,735	15.08	2,813	17.29	2,890	19.56	2,966	21.90	3,041	24.28				

CLASS I = MAX. 1,906 RPM RPMCLASS II = MAX. 2,477 RPM CLASS III = MAX. 3,144 RPM APF221

SIZE 13, 9X, 5XXX

MAXIMUM 20 HP MOTOR

CFM	STATIC PRESSURE IN INCHES OF WATER																			
	1" SP		2" SP		3" SP		4" SP		5" SP		6" SP		7" SP		8" SP		10" SP		12" SP	
	RPM	BHP	RPM	BHP	RPM	BHP	RPM	BHP	RPM	BHP	RPM	BHP	RPM	BHP	RPM	BHP	RPM	BHP	RPM	BHP
2,400																				
3,000	737	0.68																		
3,600	771	0.80																		
4,200	823	0.95	1041	1.91																
4,800	878	1.11	1,069	2.13	1,268	3.34														
5,400	937	1.30	1,116	2.41	1,284	3.64	1,462	5.06												
6,000	999	1.50	1,170	2.72	1,317	3.99	1,474	5.44	1,634	7.04										
6,600	1,065	1.74	1,224	3.04	1,365	4.41	1,500	5.88	1,645	7.51	1,790	9.28								
7,200	1,133	2.02	1,281	3.39	1,419	4.88	1,542	6.40	1,668	8.05	1,801	9.84	1,935	11.78						
7,800	1,203	2.32	1,341	3.77	1,473	5.35	1,592	6.98	1,705	8.67	1,823	10.48	1,946	12.43	2,070	14.51				
8,400	1,274	2.67	1,404	4.19	1,529	5.86	1,646	7.60	1,752	9.35	1,857	11.19	1,968	13.18	2,082	15.26	2,311	19.82		
9,000	1,347	3.06	1,469	4.65	1587	6.39	1,701	8.25	1,805	10.11	1,903	12.01	2,001	14.00	2,105	16.14	2,319	20.70		
9,600	1,420	3.48	1,536	5.16	1,647	6.97	1,756	8.90	1,860	10.91	1954	12.89	2045	14.92	2138	17.07	2,335	21.71	2536	26.74
10,200	1,493	3.95	1,605	5.73	1,710	7.60	1,814	9.61	1,914	11.70	2,008	13.82	2,096	15.95	2,181	18.11	2,360	22.81	2,548	27.88
10,800	1,568	4.47	1,675	6.34	1,775	8.29	1,873	10.35	1,970	12.54	2,063	14.79	2,149	17.01	2,231	19.26	2,395	24.01	2,568	29.14
11,400	1,643	5.04	1,745	6.99	1,841	9.02	1,935	11.17	2,028	13.43	2,118	15.77	2,204	18.13	2,285	20.51	2,439	25.33	2,597	30.51
12,000	1,718	5.65	1,817	7.70	1,909	9.82	1,998	12.03	2,087	14.36	2,174	16.78	2,259	19.27	2,339	21.75	2,488	26.74	2,,635	31.99
12,600	1,794	6.33	1,889	8.47	1,978	10.68	2,064	12.97	2,148	15.35	2,232	17.85	2,314	20.42	2,394	23.05	2,541	28.26	2,,680	33.58
13,200	1,871	7.07	1,962	9.30	2,048	11.59	2,130	13.95	2,211	16.41	2,292	18.99	2,371	21.63	2,449	2,4.36	2,596	29.85	2,731	35.35
13,800	1,947	7.86	2,035	10.18	2,118	12.56	2,198	15.02	2,276	17.55	2,353	20.18	2430	22.92	2,505	25.70	2,650	31.43	27,84	37.17
14,400	2,024	8.72	2,109	11.13	2,190	13.62	2,267	16.15	2,342	18.76	2,416	21.45	2,489	24.22	2,563	27.13	2,705	33.05		
15,000	2,102	9.66	2,183	12.15	2,261	14.71	2,336	17.33	2,409	20.03	2,480	22.79	2,551	25.65	2,622	28.61	2,760	34.69		

CLASS I = MAX. 1,663 RPM CLASS II = MAX. 2,202 RPM CLASS III = MAX. 2,795 RPM APF251

SIZES 18, 13X, 9XX

MAXIMUM 30 HP MOTOR

CFM	STATIC PRESSURE IN INCHES OF WATER																			
	1" SP		2" SP		3" SP		4" SP		5" SP		6" SP		7" SP		8" SP		10" SP		12" SP	
	RPM	BHP	RPM	BHP	RPM	BHP	RPM	BHP	RPM	BHP	RPM	BHP	RPM	BHP	RPM	BHP	RPM	BHP	RPM	BHP
3,000																				
3,800	633	0.87																		
4,600	662	1.03																		
5,400	699	1.21	896	2.47																
6,200	740	1.42	921	2.77																
7,000	787	1.65	959	3.14	1105	4.73														
7,800	837	1.91	997	3.52	1,138	5.23	1,269	7.08												
8,600	889	2.20	1,038	3.92	1,176	5.78	1,296	7.7	1,417	9.80										
9,400	942	2.53	1,083	4.36	1,213	6.34	1,333	8.41	1,439	1,0.51	1,552	12.87								
10,200	997	2.90	1,131	4.84	1,254	6.95	1,370	9.14	1,476	11.41	1,573	13.71	1,677	16.27						
11,000	1,054	3.33	1,181	5.36	1,297	7.58	1,408	9.90	1,513	12.31	1,608	14.75	1,698	17.24	1,794	19.99				
11,800	1,111	3.79	1,233	5.94	1,343	8.26	1,449	10.72	1,550	13.24	1,646	15.85	1,733	18.46	1,817	21.14	2,006	27.29		
12,600	1,170	4.32	1,286	6.57	1,392	9.00	1,492	11.56	1,589	14.21	1,683	16.95	1,771	19.74	1,852	22.53	2,012	28.43		
13,400	1,229	4.89	1,340	7.25	1,442	9.78	1,538	12.47	1,631	15.25	1,721	18.09	1,808	21.02	1,890	23.99	2,040	29.98	2,196	36.58
14,200	1,289	5.52	1,395	8.00	1,494	10.64	1,586	13.42	1,674	16.30	1,761	19.28	1,845	22.31	1,927	25.45	2,076	31.74	2,216	38.23
15,000	1,349	6.20	1,451	8.81	1,546	1,1.54	1,635	14.42	1,720	17.43	1,803	20.52	1,885	23.70	1,964	26.92	2,114	33.57	2,249	40.26
15,800	1,410	6.96	1,508	9.68	1,600	12.53	1,686	15.51	1,768	18.62	1,848	21.85	1,926	25.12	2,003	28.48	2,151	35.39	2,286	42.41
16,600	1,471	7.78	1,565	10.62	1,654	13.58	1,738	16.66	1,818	19.90	1,894	23.20	1,970	26.64	2,044	30.10	2,188	37.24	2,324	44.60
17,400	1,533	8.68	1,623	11.62	1,709	14.70	1,791	17.91	1,868	21.21	1,943	24.67	2,015	28.18	2,087	31.80	2,227	39.18	2,360	46.74
18,200	1,595	9.64	1,682	12.72	1,765	15.91	1,844	19.20	1,920	22.64	1,992	26.17	2,062	29.80	2,131	33.52	2,267	41.17	2,398	49.02
19,000	1,658	10.70	1,741	13.88	1,821	17.17	1,898	20.59	1,972	24.12	2,043	27.78	2,111	31.53	2,178	35.38	2,309	43.24		
19,800	1,720	11.82	1,801	15.13	1,879	18.56	1,953	22.07	2,025	25.70	2,094	29.45	2,161	33.32	2,225	37.23	2,352	45.35		

CLASS I = MAX. 1,476 RPM CLASS II = MAX. 1,919 RPM CLASS III = MAX. 2,435 RPM APF281

SIZES 24, 18X, 13XX

MAXIMUM 50 HP MOTOR

CFM	STATIC PRESSURE IN INCHES OF WATER																			
	1" SP		2" SP		3" SP		4" SP		5" SP		6" SP		7" SP		8" SP		10" SP		12" SP	
	RPM	BHP	RPM	BHP	RPM	BHP	RPM	BHP	RPM	BHP	RPM	BHP	RPM	BHP	RPM	BHP	RPM	BHP	RPM	BHP
5,000	563	1.13																		
6,000	592	1.34																		
7,000	625	1.57	796	3.18																
8,000	662	1.84	822	3.58																
9,000	703	2.13	854	4.03	983	6.07														
10,000	747	2.46	888	4.51	1,013	6.71	1,127	9.05												
11,000	792	2.82	924	5.02	1,046	7.40	1,152	9.84	1,258	12.51										
12,000	839	3.24	963	5.57	1,079	8.11	1,185	10.75	1,279	13.43										
13,000	887	3.71	1,005	6.17	1,114	8.85	1,217	11.66	1,311	14.54	1,397	17.47	1,488	20.69						
14,000	936	4.23	1,049	6.83	1,152	9.66	1,250	12.60	1,344	15.69	1,428	18.78	1,508	21.97	1,592	25.42				
15,000	987	4.83	1,095	7.56	1,192	10.50	12.86	13.62	1,376	16.84	1,461	20.15	1,538	23.46	1,613	26.89	1,780	34.69		
16,000	1,038	5.48	1,141	8.34	1,235	11.43	1,324	14.69	1,410	18.05	1,493	21.52	1,571	25.05	1,643	28.60	1,785	36.09		
17,000	1,089	6.18	1,188	9.19	1,279	12.41	1,364	15.82	1,446	19.32	1,526	22.93	1,603	26.64	1,677	30.47	1,810	38.07	1,948	46.50
18,000	1,141	6.96	1,236	10.12	1,324	13.47	1,405	16.98	1,484	20.66	1,561	24.42	1,636	28.28	1,709	32.27	1,841	40.24	1,966	48.53
19,000	1,194	7.83	1,285	11.13	1,369	14.58	1,449	18.27	1,524	22.06	1,598	25.99	1,671	30.03	1,741	34.10	1,874	42.51	1,994	51.01
20,000	1,247	8.76	1,334	12.20	1,416	15.82	1,493	19.60	1,566	23.56	1,637	27.64	1,707	31.81	1,775	36.04	1,906	44.77	2,026	53.67
21,000	1,301	9.80	1,384	13.37	1,463	17.11	1,538	21.03	1,609	25.12	1,677	29.32	1,745	33.69	1,811	38.09	1,939	47.13	2,059	56.40
22,000	1,355	10.91	1,435	14.63	1,511	18.51	1,584	22.56	1,653	26.77	1,719	31.11	1,784	35.61	1,848	40.18	1,972	49.48	2,091	59.11
23,000	1,409	12.10	1,486	15.98	1,560	20.01	1,631	24.21	1,698	28.53	1,763	33.05	1,825	37.63	1,886	42.31	2,007	51.97	2,124	61.94
24,000	1,464	13.41	1,538	17.43	1,610	21.63	1,678	25.92	1,744	30.40	1,807	35.03	1,867	39.73	1,927	44.62	2,044	54.59	2,157	64.77
25,000	1,518	14.79	1,590	18.97	1,659	23.29	1,726	27.76	1,790	32.35	1,851	37.06	1,911	41.99	1,968	46.94	2,081	57.19		
26,000	1,573	16.29	1,643	20.64	1,710	25.11	1,774	29.68	1,837	34.44	1,897	39.29	1,955	44.31	2,011	49.42	2,120	59.93		

CLASS I = MAX. 1,310 RPM CLASS II = MAX. 1,671 RPM CLASS III = MAX. 2,160 RPM APF321

SIZES 28, 24X, 18XX

MAXIMUM 50 HP MOTOR

CFM	STATIC PRESSURE IN INCHES OF WATER																			
	1" SP		2" SP		3" SP		4" SP		5" SP		6" SP		7" SP		8" SP		10" SP		12" SP	
	RPM	BHP	RPM	BHP	RPM	BHP	RPM	BHP	RPM	BHP	RPM	BHP	RPM	BHP	RPM	BHP	RPM	BHP	RPM	BHP
6,000																				
7,200	511	1.60																		
8,400	536	1.85																		
9,600	566	2.14	714	4.32																
9,000	703	2.13	854	4.03	983	6.07														
10,000	747	2.46	888	4.51	1,013	6.71	1,127	9.05												
11,000	792	2.82	924	5.02	1,046	7.40	1,152	9.84	1,258	12.51										
12,000	839	3.24	963	5.57	1,079	8.11	1,185	10.75	1,279	13.43										
13,000	887	3.71	1,005	6.17	1,114	8.85	1,217	11.66	1,311	14.54	1,397	17.47	1,488	20.69						
14,000	936	4.23	1,049	6.83	1,152	9.66	1,250	12.60	1,344	15.69	1,428	18.78	1,508	21.97	1,592	25.42				
15,000	987	4.83	1,095	7.56	1,192	10.50	12.86	13.62	1,376	16.84	1,461	20.15	1,538	23.46	1,613	26.89	1,780	34.69		
16,000	1,038	5.48	1,141	8.34	1,235	11.43	1,324	14.69	1,410	18.05	1,493	21.52	1,571	25.05	1,643	28.60	1,785	36.09		
17,000	1,089	6.18	1,188	9.19	1,279	12.41	1,364	15.82	1,446	19.32	1,526	22.93	1,603	26.64	1,677	30.47	1,810	38.07	1,948	46.50
18,000	1,141	6.96	1,236	10.12	1,324	13.47	1,405	16.98	1,484	20.66	1,561	24.42	1,636	28.28	1,709	32.27	1,841	40.24	1,966	48.53
19,000	1,194	7.83	1,285	11.13	1,369	14.58	1,449	18.27	1,524	22.06	1,598	25.99	1,671	30.03	1,741	34.10	1,874	42.51	1,994	51.01
20,000	1,247	8.76	1,334	12.20	1,416	15.82	1,493	19.60	1,566	23.56	1,637	27.64	1,707	31.81	1,775	36.04	1,906	44.77	2,026	53.67
21,000	1,301	9.80	1,384	13.37	1,463	17.11	1,538	21.03	1,609	25.12	1,677	29.32	1,745	33.69	1,811	38.09	1,939	47.13	2,059	56.40
22,000	1,355	10.91	1,435	14.63	1,511	18.51	1,584	22.56	1,653	26.77	1,719	31.11	1,784	35.61	1,848	40.18	1,972	49.48	2,091	59.11
23,000	1,409	12.10	1,486	15.98	1,560	20.01	1,631	24.21	1,698	28.53	1,763	33.05	1,825	37.63	1,886	42.31	2,007	51.97	2,124	61.94
24,000	1,464	13.41	1,538	17.43	1,610	21.63	1,678	25.92	1,744	30.40	1,807	35.03	1,867	39.73	1,927	44.62	2,044	54.59	2,157	64.77
25,000	1,518	14.79	1,590	18.97	1,659	23.29	1,726	27.76	1,790	32.35	1,851	37.06	1,911	41.99	1,968	46.94	2,081	57.19		
26,000	1,573	16.29	1,643	20.64	1,710	25.11	1,774	29.68	1,837	34.44	1,897	39.29	1,955	44.31	2,011	49.42	2,120	59.93		

CLASS I = MAX. 1,164 RPM CLASS II = MAX. 1,486 RPM CLASS III = MAX. 1,921 RPM APF351

SIZE 35, 28X, 24XX, 18XXX

MAXIMUM 50 HP MOTOR

STATIC PRESSURE IN INCHES OF WATER																					
CFM	1" SP		2" SP		3" SP		4" SP		5" SP		6" SP		7" SP		8" SP		10" SP		12" SP	
	RPM	BHP	RPM	BHP	RPM	BHP	RPM	BHP	RPM	BHP	RPM	BHP	RPM	BHP	RPM	BHP	RPM	BHP	RPM	BHP
7000																				
8500	455	1.90																		
10000	476	2.20																		
11500	503	2.56	639	5.19																
13000	532	2.94	656	5.75																
14500	562	3.37	680	6.41	786	9.75														
16000	593	3.83	706	7.10	805	10.64	902	14.52												
17500	625	4.34	735	7.86	828	11.59	917	15.63	1007	19.99										
19000	658	4.90	764	8.64	853	12.58	937	16.80	1018	21.27	1102	26.06								
20500	693	5.54	795	9.53	881	13.67	961	18.10	1037	22.73	1112	27.62	1191	32.88						
22000	729	6.24	825	10.42	911	14.87	987	19.48	1060	24.32	1130	29.35	1200	34.65	1273	40.24				
23500	765	7.00	857	11.41	941	16.10	1015	20.94	1084	25.94	1152	31.22	1217	36.62	1282	42.23				
25000	802	7.85	889	12.45	971	17.39	1044	22.47	1110	27.64	1175	33.10	1238	38.73	1299	44.50	1425	56.94		
26500	839	8.76	922	13.56	1001	18.71	1074	24.10	1139	29.54	1200	35.09	1261	40.94	1320	46.94	1436	59.49		
28000	877	9.78	957	14.81	1033	20.19	1104	25.78	1168	31.45	1228	37.29	1286	43.29	1343	49.47	1453	62.29	1564	76.01
29500	915	10.88	992	16.12	1064	21.65	1134	27.52	1198	33.48	1256	39.47	1312	45.67	1367	52.05	1474	65.34	1578	79.25
31000	953	12.06	1028	17.54	1097	23.27	1165	29.37	1228	35.58	1286	41.87	1340	48.22	1393	54.80	1497	68.52	1596	82.66
32500	991	13.33	1064	19.03	1131	25.02	1196	31.27	1258	37.73	1316	44.32	1370	50.99	1421	57.72	1521	71.76	1617	86.29
34000	1030	14.74	1101	20.66	1165	26.82	1228	33.30	1288	39.94	1346	46.83	1399	53.69	1450	60.76	1546	75.09	1640	90.09
35500	1069	16.24	1137	22.32	1200	28.75	1260	35.38	1319	42.29	1376	49.42	1429	56.57	1479	63.82	1573	78.62	1664	93.98
37000	1108	17.84	1175	24.20	1235	30.76	1294	37.69	1351	44.79	1406	52.06	1459	59.52	1509	67.06	1601	82.26	1689	97.99
38500	1147	19.55	1212	26.12	1271	32.93	1328	40.07	1383	47.34	1437	54.87	1489	62.54	1539	70.39	1630	86.06		

Class I = Max. 1028 RPM Class II = Max. 1337 RPM Class III = Max. 1696 RPM APF391

SIZE 43, 35X, 28XX

MAXIMUM 50 HP MOTOR (UP TO 75 HP MOTOR ON C-III FAN)

STATIC PRESSURE IN INCHES OF WATER																					
CFM	1" SP		2" SP		3" SP		4" SP		5" SP		6" SP		7" SP		8" SP		10" SP		12" SP	
	RPM	BHP	RPM	BHP	RPM	BHP	RPM	BHP	RPM	BHP	RPM	BHP	RPM	BHP	RPM	BHP	RPM	BHP	RPM	BHP
9000																				
11000	409	2.44																		
13000	431	2.87																		
15000	457	3.35	574	6.71																
17000	485	3.88	593	7.50	696	11.63														
19000	514	4.48	617	8.41	709	12.72														
21000	543	5.10	643	9.36	729	13.94	811	18.87												
23000	574	5.82	671	10.41	752	15.25	828	20.38	903	25.90										
25000	607	6.64	699	11.50	777	16.62	850	22.09	919	27.79	989	33.94								
27000	640	7.51	728	12.70	805	18.17	873	23.81	940	29.88	1003	36.05	1068	42.73						
29000	675	8.53	758	13.99	833	19.76	900	25.80	962	31.97	1023	38.50	1082	45.22	1142	52.33				
31000	710	9.64	788	15.34	862	21.50	927	27.78	987	34.29	1045	41.03	1102	48.10	1157	55.29	1271	70.75		
33000	745	10.84	820	16.86	891	23.29	955	29.90	1014	36.77	1069	43.73	1124	51.07	1176	58.44	1281	74.25		
35000	781	12.19	852	18.44	920	25.15	984	32.18	1041	39.25	1095	46.60	1147	54.12	1198	61.85	1297	78.00	1396	95.09
37000	817	13.64	886	20.22	950	27.14	1013	34.55	1070	42.02	1122	49.56	1172	57.34	1221	65.34	1316	81.91	1409	99.37
39000	853	15.22	920	22.11	982	29.37	1042	36.98	1098	44.76	1150	52.70	1199	60.80	1246	69.05	1338	86.17	1427	104.11
41000	889	16.92	954	24.10	1013	31.59	1071	39.47	1127	47.70	1178	55.90	1226	64.28	1272	72.84	1361	90.54	1447	108.94
43000	926	18.81	989	26.28	1046	34.07	1102	42.26	1156	50.72	1207	59.35	1255	68.13	1299	76.80	1385	95.01	1469	114.03
45000	963	20.83	1024	28.59	1079	36.65	1133	45.12	1185	53.82	1236	62.89	1283	71.91	1327	80.98	1411	99.77	1492	119.27
47000	1000	23.01	1060	31.13	1113	39.44	1165	48.19	1215	57.12	1265	66.51	1312	75.96	1356	85.43	1438	104.71		
49000	1038	25.41	1095	33.72	1148	42.46	1197	51.35	1246	60.64	1294	70.22	1340	79.94	1384	89.80	1466	109.90		
51000	1075	27.90	1131	36.56	1182	45.51	1230	54.74	1277	64.26	1324	74.17	1369	84.18	1413	94.48	1494	115.16		

Class I = Max. 918 RPM Class II = Max. 1194 RPM Class III = Max. 1515 RPM APF441

Legend:
Class I = First white section
Class II = Green shaded section
Class III = White section after green section
Underlined figures indicate Maximum Static Efficiency

SIZE 43X, 35XX

MAXIMUM 50 HP MOTOR

STATIC PRESSURE IN INCHES OF WATER																								
CFM	1" SP		2" SP		3" SP		4" SP		5" SP		6" SP		7" SP		8" SP		10" SP		12" SP	
	RPM	BHP	RPM	BHP	RPM	BHP	RPM	BHP	RPM	BHP	RPM	BHP	RPM	BHP	RPM	BHP	RPM	BHP	RPM	BHP
12000																				
14300	371	3.17																		
16600	389	3.65																		
18900	411	4.22	516	8.46																
21200	435	4.85	532	9.38	624	14.52														
23500	458	5.50	551	10.38	634	15.74														
25800	483	6.25	572	11.45	650	17.11	725	23.26												
28100	508	7.04	595	12.64	669	18.62	738	24.95	807	31.80										
30400	535	7.96	619	13.93	689	20.15	756	26.92	819	33.94	883	41.43								
32700	562	8.93	643	15.29	712	21.92	774	28.82	835	36.25	893	43.85	954	52.15						
35000	591	10.07	667	16.70	735	23.72	795	30.98	853	38.66	908	46.54	963	54.88	1020	63.77				
37300	619	11.24	692	18.23	759	25.67	817	33.21	872	41.14	926	49.48	978	58.08	1029	66.91				
39600	648	12.56	717	19.82	782	27.59	841	35.71	893	43.81	945	52.49	995	61.38	1043	70.40	1141	89.75		
41900	678	14.04	744	21.63	806	29.68	864	38.15	916	46.76	965	55.59	1013	64.72	1060	74.19	1152	93.99	1247	115.09
44200	707	15.57	771	23.52	831	31.95	888	40.81	939	49.73	987	58.95	1033	68.39	1078	78.03	1166	98.34	1253	119.68
46500	737	17.29	799	25.59	856	34.28	911	43.41	963	52.93	1009	62.31	1054	72.14	1097	82.02	1182	102.84	1265	124.79
48800	767	19.14	827	27.76	882	36.80	936	46.36	986	56.07	1033	66.08	1076	76.05	1118	86.34	1201	107.93	1280	130.21
51100	797	21.11	855	30.04	908	39.39	960	49.23	1010	59.46	1056	69.74	1099	80.19	1140	90.82	1219	112.67	1296	135.57
53400	828	23.31	884	32.55	935	42.21	985	52.33	1034	62.94	1080	73.70	1122	84.39	1163	95.53	1239	117.86	1315	141.68
55700	858	25.58	913	35.20	963	45.25	1011	55.67	1058	66.49	1103	77.56	1146	88.91	1186	100.30	1261	123.48	1334	147.70
58000	889	28.08	942	37.99	991	48.42	1037	59.11	1083	70.30	1127	81.71	1169	93.32	1209	105.14	1283	129.07	1353	153.62
60300	920	30.75	972	41.06	1019	51.72	1064	62.80	1108	74.21	1151	85.95	1193	98.07	1233	110.36	1306	134.97		

Class I = Max. 823 RPM Class II = Max. 1070 RPM Class III = Max. 1358 RPM APF491

Legend:
Class I = First white section
Class II = Green shaded section
Class III = White section after green section
Underlined figures indicate Maximum Static Efficiency

COIL DATA TABLES

Standard PVS Chilled Water Coils

Model	Capacity (cfm)		Finned Height	Finned Width	Face Velocity (fpm)	Standard Chilled Water Coils			
						Water Pressure Drop, ft.	GPM	Leaving Air Temp. °F db/wb	Connection Size MPT
PVS-3	Low	2,294	33 in	30 in	334	10.6	18	51.9 / 52.3	1.5 "
	Med	2,544			370	12.7	13	52.6 / 52.4	
	High	2,794			406	14.9	22	53.0 / 52.7	
PVS-5	Low	3,340	45 in	30 in	356	13.4	29	52.1 / 51.9	2 "
	Med	4,340			463	16.1	32	53.6 / 53.3	
	High	4,840			516	19.5	36	54.0 / 53.7	
PVS-9	Low	4,918	54 in	42 in	312	4.7	42	52.2 / 52.0	1.5 "
	Med	6,418			407	7.5	55	53.0 / 52.8	
	High	8,418			534	10.4	66	54.3 / 54.0	
PVS-13	Low	6,514	66 in	42 in	338	5.8	56	52.4 / 52.3	1.5 "
	Med	8,514			442	9.4	73	53.3 / 53.0	
	High	10,514			546	11.7	82	54.4 / 54.1	
PVS-18	Low	8,613	78 in	54 in	294	5.9	67	52.0 / 51.9	2 "
	Med	10,613			363	8.6	83	52.7 / 52.5	
	High	15,613			534	16.9	122	53.9 / 53.6	
PVS-24	Low	11,719	90 in	54 in	347	9.6	100	52.1 / 51.9	2 "
	Med	14,719			436	14.4	126	52.9 / 52.7	
	High	18,719			555	18.8	147	54.1 / 53.7	
PVS-28	Low	15,799	99 in	66 in	348	8.1	89	52.1 / 51.5	1.5 "
	Med	19,299			425	11.6	109	52.6 / 52.0	
	High	23,799			524	16.8	134	53.2 / 52.4	
PVS-35	Low	18,918	111 in	66 in	372	5.8	158	52.7 / 52.5	2.5 "
	Med	23,418			460	8.4	195	53.4 / 53.0	
	High	27,918			549	9.8	213	54.3 / 54.0	
PVS-43	Low	27,045	123 in	90 in	352	9.8	218	52.4 / 52.2	2.5 "
	Med	31,045			404	12.5	249	52.9 / 52.6	
	High	41,045			534	19.1	317	54.0 / 53.6	

DESIGN BASIS: Entering air temperature: 73°Fdb/66°Fwb; entering water temperature: 45°F; water temperature rise: 11°±2°F. 10 fins per inch, 6 rows per coil.
NOTE 1: CFM capacity includes typical values for PD wheel purge volume.

COIL DATA TABLES

Standard PVS DX Coils

Model	Capacity (cfm)		Finned Height	Finned Width	Face Velocity (fpm)	Standard Chilled Water Coils		
						Leaving Air Temp. °F db	Suction Line Connection Size MPT	Liquid Line Connection Size MPT
PVS-3	Low	2,294	33 in	30 in	334	54.1 / 54.1	(1) 1-5/8	(1) 1-3/8
	Med	2,544			370	54.5 / 54.5	(1) 1-5/8	(1) 1-3/8
	High	2,794			406	55.0 / 54.9	(1) 1-5/8	(1) 1-3/8
PVS-5	Low	3,340	45 in	30 in	356	54.4 / 54.3	(1) 1-5/8	(1) 1-3/8
	Med	4,340			463	55.5 / 55.4	(1) 1-5/8	(1) 1-3/8
	High	4,840			516	56.1 / 56.0	(1) 1-5/8	(1) 1-3/8
PVS-9	Low	4,918	54 in	42 in	312	52.3 / 52.3	(2) 1-5/8	(2) 1-1/8
	Med	6,418			407	53.6 / 53.5	(2) 1-5/8	(2) 1-1/8
	High	8,418			534	55.0 / 54.8	(2) 1-5/8	(2) 1-1/8
PVS-13	Low	6,514	66 in	42 in	338	52.7 / 52.7	(2) 1-5/8	(2) 1-3/8
	Med	8,514			442	54.0 / 53.9	(2) 1-5/8	(2) 1-3/8
	High	10,514			546	55.1 / 54.9	(2) 1-5/8	(2) 1-3/8
PVS-18	Low	8,613	78 in	54 in	294	51.4 / 51.4	(2) 2-1/8	(2) 1-3/8
	Med	10,613			363	52.4 / 52.4	(2) 2-1/8	(2) 1-3/8
	High	15,613			534	54.5 / 54.4	(2) 2-1/8	(2) 1-3/8
PVS-24	Low	11,719	90 in	54 in	347	52.2 / 52.2	(2) 2-1/8	(2) 1-3/8
	Med	14,719			436	53.4 / 53.3	(2) 2-1/8	(2) 1-3/8
	High	18,719			555	54.8 / 54.6	(2) 2-1/8	(2) 1-3/8
PVS-28	Low	15,799	99 in	66 in	348	52.2 / 52.2	(3) 2-1/8	(3) 1-3/8
	Med	19,299			425	53.3 / 53.2	(3) 2-1/8	(3) 1-3/8
	High	23,799			524	54.6 / 54.5	(3) 2-1/8	(3) 1-3/8
PVS-35	Low	18,918	111 in	66 in	372	52.5 / 52.5	(3) 2-1/8	(3) 1-3/8
	Med	23,418			460	53.8 / 53.7	(3) 2-1/8	(3) 1-3/8
	High	27,918			549	54.9 / 54.7	(3) 2-1/8	(3) 1-3/8
PVS-43	Low	27,045	123 in	90 in	352	52.1 / 52.1	(3) 2-5/8	(3) 1-5/8
	Med	31,045			404	52.9 / 52.8	(3) 2-5/8	(3) 1-5/8
	High	41,045			534	54.5 / 54.3	(3) 2-5/8	(3) 1-5/8

DESIGN BASIS: Entering air temperature: 73°Fdb/66°Fwb; DX coil suction temperature: 45°F; refrigerant: R-22. 10 fins per inch, 6 rows per coil.
NOTE 1: CFM capacity includes typical values for PD wheel purge volume.

COIL DATA TABLES

Standard PVS Electric Coils

Model	Capacity (cfm)	Electric Heater kW	Nominal Temp Rise at Rated Capacity	FLA @ 208 Volts 3Ø / 60 hz	FLA @ 240 Volts 3Ø / 60 hz	FLA @ 480 Volts 3Ø / 60 hz
PVS-3	Low 2,000 Med 2,250 High 2,500	10	15.8 14.0 12.6	27.8	24.1	12.0
PVS-5	Low 3,000 Med 4,000 High 4,500	15	15.8 11.9 10.5	41.6	36.1	18.0
PVS-9	Low 4,500 Med 6,000 High 8,000	20	14.0 10.5 7.9	55.5	48.1	24.1
PVS-13	Low 6,000 Med 8,000 High 10,000	25	13.2 9.9 7.9	69.4	60.1	30.1
PVS-18	Low 8,000 Med 10,000 High 15,000	35	13.8 11.1 7.4	97.2	84.2	42.1
PVS-24	Low 11,000 Med 14,000 High 18,000	45	12.9 10.2 7.9	124.9	108.3	54.1
PVS-28	Low 15,000 Med 18,500 High 23,000	60	12.6 10.2 8.2	-	-	72.2
PVS-35	Low 18,000 Med 22,500 High 27,000	75	13.2 10.5 8.8	-	-	90.2
PVS-43	Low 26,000 Med 30,000 High 40,000	100	12.2 10.5 7.9	-	-	120.3

COIL DATA TABLES

Increased Capacity PVS Electric Coils

Model	Capacity (cfm)	Electric Heater kW	Nominal Temp Rise at Rated Capacity	FLA @ 208 Volts 3Ø / 60 hz	FLA @ 240 Volts 3Ø / 60 hz	FLA @ 480 Volts 3Ø / 60 hz
PVS-3	Low 2,000 Med 2,250 High 2,500	30	47.4 42.1 37.9	83.3	72.2	36.1
PVS-5	Low 3,000 Med 4,000 High 4,500	45	47.4 35.6 31.6	124.9	108.3	54.1
PVS-9	Low 4,500 Med 6,000 High 8,000	60	42.1 31.6 23.7	166.5	144.3	72.2
PVS-13	Low 6,000 Med 8,000 High 10,000	75	39.5 29.6 23.7	208.2	180.4	90.2
PVS-18	Low 8,000 Med 10,000 High 15,000	105	41.5 33.2 22.1	291.5	252.6	126.3
PVS-24	Low 11,000 Med 14,000 High 18,000	135	38.8 30.5 23.7	374.7	324.8	162.4
PVS-28	Low 15,000 Med 18,500 High 23,000	180	37.9 30.7 24.7	-	-	216.5
PVS-35	Low 18,000 Med 22,500 High 27,000	225	39.5 31.6 26.3	-	-	270.6
PVS-43	Low 26,000 Med 30,000 High 40,000	300	36.5 31.6 23.7	-	-	360.8

Note 1: Electric heating coils require a separate power connection.
Note 2: To determine Minimum Ampacity use 125% of the listed full load amps.
Note 3: Fuse Recommendation: Use 125% of the listed full load amps and select the next larger size Dual-Element Time-Delay Fuses.
Note 4: Due to purge volume, nominal temperature rise will be reduced in PVS units if electric heating coil is located upstream of the PD wheel.

Note 5: $kw = \frac{cfm \times \Delta T}{360}$

COIL DATA TABLES

Standard PVS Hot Water Coils

DESIGN BASIS: Entering air temperature: 0°F; entering water temperature: 160°F; leaving water temperature: 160±3°F. 6 fins per inch, 1 row per coil. Note 1: CFM capacity includes typical values for PD wheel purge volume.

Model	Capacity (cfm)		Finned Height	Finned Width	Face Velocity (fpm)	Standard Chilled Water Coils			
						Water Pressure Drop, ft.	GPM	Leaving Air Temp. °F db	Connection Size MPT
PVS-3	Low	2,000	33 in	30 in	291	0.39	8	66.3	1.5”
	Med	2,250			327	0.48	9	64.8	
	High	2,500			364	0.48	9	63.0	
PVS-5	Low	3,000	45 in	30 in	320	0.52	12	65.1	1.5”
	Med	4,000			427	0.69	14	61.1	
	High	4,500			480	0.78	15	59.6	
PVS-9	Low	4,500	54 in	42 in	286	0.37	18	65.7	1.5”
	Med	6,000			381	0.49	21	61.6	
	High	8,000			508	0.67	25	58.0	
PVS-13	Low	6,000	66 in	42 in	312	0.47	23	64.4	1.5”
	Med	8,000			416	0.62	27	60.5	
	High	10,000			519	0.80	31	57.7	
PVS-18	Low	8,000	78 in	54 in	274	0.78	33	67.2	1.5”
	Med	10,000			342	1.01	38	64.0	
	High	15,000			513	1.55	48	58.6	
PVS-24	Low	11,000	90 in	54 in	326	0.58	42	64.6	2”
	Med	14,000			415	0.74	48	61.2	
	High	18,000			533	0.95	55	58.0	
PVS-28	Low	15,000	99 in	66 in	331	1.30	58	64.9	1.5”
	Med	18,500			408	1.60	65	62.0	
	High	23,000			507	2.08	75	59.2	
PVS-35	Low	18,000	111 in	66 in	354	1.56	68	64.1	1.5”
	Med	22,500			442	1.89	75	60.9	
	High	27,000			531	2.24	83	58.5	
PVS-43	Low	26,000	123 in	90 in	338	3.13	105	65.4	1.5”
	Med	30,000			390	3.55	113	63.3	
	High	40,000			520	4.94	135	59.5	

Increased Capacity PVS Hot Water Coils

DESIGN BASIS: Entering air temperature: 0°F; entering water temperature: 160°F; leaving water temperature: 160±3°F. 7 fins per inch, 2 rows per coil. Note 1: CFM capacity includes typical values for PD wheel purge volume.

Model	Capacity (cfm)		Finned Height	Finned Width	Face Velocity (fpm)	Standard Chilled Water Coils			
						Water Pressure Drop, ft.	GPM	Leaving Air Temp. °F db	Connection Size MPT
PVS-3	Low	2,000	33 in	30 in	291	1.18	18	80.3	1.5”
	Med	2,250			327	1.30	19	77.0	
	High	2,500			364	1.56	21	74.6	
PVS-5	Low	3,000	45 in	30 in	320	1.45	26	77.8	2”
	Med	4,000			427	2.11	32	70.7	
	High	4,500			480	2.35	34	67.7	
PVS-9	Low	4,500	54 in	42 in	286	2.07	41	82.2	1.5”
	Med	6,000			381	2.95	50	74.8	
	High	8,000			508	4.10	60	67.7	
PVS-13	Low	6,000	66 in	42 in	312	2.57	53	79.9	1.5”
	Med	8,000			416	3.61	64	72.6	
	High	10,000			519	4.80	75	67.2	
PVS-18	Low	8,000	78 in	54 in	274	3.81	75	84.2	2”
	Med	10,000			342	5.08	88	78.5	
	High	15,000			513	8.08	114	68.3	
PVS-24	Low	11,000	90 in	54 in	326	5.18	98	79.7	2”
	Med	14,000			415	6.91	115	73.6	
	High	18,000			533	9.22	135	67.4	
PVS-28	Low	15,000	99 in	66 in	331	7.55	135	80.0	1.5”
	Med	18,500			408	9.45	153	74.5	
	High	23,000			507	12.38	178	69.2	
PVS-35	Low	18,000	111 in	66 in	354	8.48	153	78.2	1.5”
	Med	22,500			442	11.01	177	72.5	
	High	27,000			531	13.47	198	68.0	
PVS-43	Low	26,000	123 in	90 in	338	2.50	233	78.2	2.5”
	Med	30,000			390	2.96	255	74.5	
	High	40,000			520	4.14	308	67.4	

SAMPLE SPECIFICATIONS

A. Casing - Standard panels shall consist of 2” thick dual wall 18 gauge (20 gauge for unit sizes 3, 5, and 9) galvanized solid exterior skins and 22 gauge galvanized steel solid interior skins enclosing 2 inch thick 3 pcf mineral wool insulation with a U-factor of 0.10 BTU/(hr-sq.ft.-deg.) The housing shall be supported by a painted structural steel base. The base includes a solid welded floor with 6” thick (4” thick for unit sizes 3, 5, and 9) mineral wool insulation. The bottom face of the insulation shall be protected with a 22 gauge galvanized steel cover. The base is to be self-flashing when set on a properly sized curb. Floor openings have perimeter lips turned up into unit and are covered by a protective grate. Lifting lugs shall be welded to the structural base.

B. Outdoor Construction - Units shall have a factory-installed, 24 gauge galvanized steel standing seam sheet metal sloped roof. Roof field joints will consist of tapered expanded polystyrene filler panels and standing seam metal roof that must be installed and crimped by the contractor. Outdoor air intake and exhaust air discharge openings shall have galvanized steel sheet metal hoods with openings covered with bird screen. Hoods may ship loose for field installation depending on shipping width restrictions.

Outdoor Intake Filters - Research Products Industrial EZ-Kleen, Aluminum mesh, 1” thick, washable filters shall be mounted in the outdoor air intake hoods. These shall be a low resistance-roughing filter.

C. Access - Access shall be provided through large hinged, tightly sealed doors or easily removable access panels. Access doors shall be constructed of the same materials as the unit casing and use FläktGroup® SEMCO’s® standard hardware. Each door shall be provided with two cam type handles and two heavy duty hinges to achieve maximum sealing. Handles are to be internal and external for opening from the inside or outside of the unit. All doors shall be air pressure closing. Removable panels shall be provided for heating and cooling coils.

D. Fans - Fan performance is based on tests conducted in accordance with AMCA Standard test code for air moving devices and shall bear the AMCA Certified Rating Seal for Air and Sound. Fans have a sharply rising pressure characteristic extending through the operating range and continuing to rise beyond the efficiency peak to ensure quiet and stable operation. Fans shall be of the centrifugal plenum type, designed without a scroll type housing. Fans shall incorporate a non-overloading type backward inclined airfoil blade wheel, heavy gauge reinforced steel inlet plate with removable spun inlet cone, structural steel frame, and shaft and bearings in the AMCA Arrangement 3 configuration to form a heavy duty integral unit. Fan wheels have a spun non-tapered style blade-retaining ring on the inlet side to allow higher efficiencies over the performance range of the fan. Sizes 281 and larger shall have nine die-formed hollow airfoil blades continuously welded around all edges. Smaller sizes shall have nine airfoil-shaped aluminum extruded blades. Fan wheels are statically and dynamically balanced to a level of G6.3 (per ANSI 2-19) or better.

Shafts - The fan shaft is polished steel, accurately turned, ground and ring gauged for accuracy. Shafts shall have first critical speeds at least 1.43 times the maximum speeds of the fan.

Bearings - The fan wheel bearings are heavy duty, grease lubricated, anti-friction ball or roller, self-aligning, pillow block type and selected for minimum average bearing life (AFBMA L-50) in excess of 200,000 hours at the maximum class RPM.

Fan vibration isolation - Fans assemblies shall have adjustable motor bases, motors and V-belt drives mounted with the assembly mounted on spring isolators with flexible connections between fan and fan wall. Drive belts shall be designed for a minimum 1.4 service factor. Drives shall be fixed pitch.

Motors - Fan motors shall be standard NEMA frame, EPACT compliant, with 1.15 service factor and open drip-proof enclosures.

E. Enthalpy Recovery Wheel - The rotor media shall be made of aluminum, which is coated to prohibit corrosion. All media surfaces shall be coated with a non-migrating solid adsorbent layer prior to being

formed into the honeycomb media structure to insure that all surfaces are coated and that adequate latent capacity is provided. The media has a flame spread of less than 25 and a smoke developed of less than 50 when rated in accordance with ASTM E84.

The faces of the total energy recovery wheel shall be sealed with a two-part polymer acid resistant coating to limit surface oxidation. The media face coating shall also include a proprietary Teflon-based anti-stick additive shown, by independent testing, to effectively limit the collection of dust or smoke particulate and to aid in the surface cleaning process should cleaning be required.

The entire recovery wheel media face shall be treated with Avron46, and shall exhibit effective antimicrobial action, supported by independent test data. Any antimicrobial agent used must, by law, carry an EPA registration for use in duct systems. All desiccant surfaces within the transfer media shall also exhibit bacteria-static properties as supported by independent testing.

The desiccant is inorganic and specifically developed for the selective adsorption of water vapor. The desiccant utilizes a 3A molecular sieve certified by the manufacturer to have an internal pore diameter distribution, which limits adsorption to materials not larger than the critical diameter of a water molecule (2.8 angstroms.)

Equal sensible and latent recovery efficiencies are documented through a certification program conducted in accordance with ASHRAE 84-78P and the results presented in accordance with ARI 1060 standards. The certification has been conducted by a qualified independent organization.

Independent wheel testing from a credible test laboratory documents that the desiccant material utilized does not transfer pollutants typically encountered in the indoor air environment. The cross-contamination and performance certification reports shall be provided upon written request for engineering review.

F. Passive Dehumidification Wheel - The Passive Dehumidification wheel shall be specifically designed to dehumidify the outdoor air stream leaving the cooling coil, without the use of additional regeneration energy of any type. The dehumidification wheel media backbone shall be an aluminum film substrate. The substrate shall be coated, prior to being formed into the honeycomb media structure, with a dense layer of solid, non-migrating adsorbent desiccant materials specifically designed to provide optimum dehumidification performance. The desiccant coating and wheel media are suitable for use in a saturated, high humidity environment and cleanable with low temperature steam or hot water without adversely affecting performance. The media has a flame spread rating of less than 25 and a smoke developed of less than 50 when rated in accordance with ASTM E84.

G. Rotor Maintenance - The media is cleanable with low-pressure steam (less than 5 psi,) hot water or light detergent, without degrading the latent recovery. Dry particles up to 800 microns shall freely pass through the media.

Purge Sector - The unit is provided with a factory set, field adjustable purge sector designed to limit cross contamination to less than .04 percent of that of the exhaust air stream concentration when operated under appropriate conditions.

Rotor Seals - The rotor is supplied with labyrinth seals only, which at no time are required to make contact with any rotating surface of the exchanger rotor face. These multi-pass seals shall utilize four labyrinth stages for optimum performance.

Rotor Support System - The rotor media is provided in segmented fashion to allow for field erection or replacement of one section at a time without requiring side access. The media is rigidly held by a structural spoke system made of extruded aluminum.

Rotor Housing - The rotor housing is a structural framework, which limits the deflection of the rotor due to air pressure to less than 1/32". The rotor is supported by two pillow block bearings which can be maintained or replaced without the removal of the rotor from its casing or the media from its spoke system.

Drive System - The rotor is driven by a black B-section v-belt and an integral gearmotor for reliable operation. A/C motors are utilized for both constant and variable speed applications.

H. Integral Condensing Unit Section - General - Integral condensing units shall be factory wired, piped, pressure tested, evacuated, charged with R-22, and tested. The energy recovery unit and condensing unit share electrical and control panels.

Compressor - Compressors shall be heavy-duty commercial, high efficiency scrolls with oil level sight glass, low vibration, and discharge and suction Rotalock service valves.

Capacity Control - Single circuit condensing units shall use variable frequency drives for capacity control. Dual circuit condensing units shall be available with either one constant speed and one variable speed circuit for continuously variable capacity, or two circuits split 1/3:2/3 for three capacity steps.

Condenser Coils - Primary surface shall be round 0.375" OD by .012" rifled copper tube with 0.0045" raised lance aluminum fins spaced at no greater than 14 fins per inch. The coils shall be pressure tested to 500 psig with a UL listed ultimate strength of 2400 psig.

Safeties and Piping Specialties - Integral condensing unit shall include the following safeties and piping specialties: Balanced port thermal expansion valve with equalizer, liquid line filter drier, sight glass, auto reset low pressure cutout, manual reset high pressure cutout, solenoid valve, air flow proof, on delay, off delay and minimum run time timers, and low ambient lockout.

Condenser Fan - Condenser fans shall be aluminum blade TCPE type with TEFC motors, bell mouth inlets, and zinc plated steel outlet guard.

I. Outdoor Air Filters - Outdoor air filters shall be 2" disposable.

J. Return Air Filters - Return air filters shall be 2" disposable.

K. 2" Pre-Filters - Filters shall be Farr type 30/30. Air filters shall be 2" thick, pleated, disposable type. Each filter shall consist of a non-woven cotton and synthetic fabric media, media support grid and enclosing frame. Filter media shall be a cotton and synthetic blend with at least 15 pleats per linear foot. A welded wire grid, spot-welded on one-inch centers and treated for corrosion resistance is bonded to the downstream side of the media to maintain the radial pleat and prevent media oscillation. The filter media shall have a Minimum Efficiency Reporting Value of MERV 7 when evaluated under guidelines of ASHRAE Standard 52.2-1999 and an average dust spot efficiency of 25-30% when evaluated under ASHRAE Standard 52.1-1992. The filter is listed by Underwriters' Laboratories as Class 2. A bank of 16-gauge galvanized steel universal holding frames with filter sealing flange, centering dimples, sealing gasket and lances for air filter fasteners shall be arranged for upstream access. Provisions shall be made on the downstream side of the frames to prevent filter blowout from moisture or overloading.

L. High Efficiency 95% Outdoor Air Filters - Mounted in the same filter bank with the Pre-filters shall be 12" deep high performance filters, which shall be high lofted supported media disposable type. The media blanket shall be formed into uniform tapered radial pleats and bonded to a welded wire media support grid, which is spot-welded on one-inch centers, and treated for corrosion resistance. Media support contour stabilizers shall be mechanically fastened to diagonal support members of the same construction to create a rigid and durable filter enclosure. There shall be a minimum of four contour stabilizers on the air entering side and six on the air exiting side. The media shall have a Minimum Efficiency Reporting Value of MERV 14 when evaluated under guidelines of ASHRAE Standard 52.2-1999 and an average dust spot efficiency of 90-95% when evaluated under ASHRAE Standard 52.1-1992. The filter is listed by Underwriters' Laboratories as Class 2.

M. Chilled Water Coil - Primary surface is round seamless 5/8" O.D. by .020" thick copper tube on 1.5" centers, staggered in the direction of airflow. All joints shall be brazed.

Secondary surface shall consist of .0060" rippled aluminum plate fins for higher capacity and structural strength. Fins shall have full drawn collars to provide a continuous surface cover over the entire tube for maximum heat transfer. Bare copper tube shall not be visible between fins and the fins shall have no openings punched in them to accumulate lint and dirt. Tubes shall be mechanically expanded into the fins to provide

a continuous primary to secondary compression bond over the entire finned length for maximum heat transfer rates.
Casings shall be constructed of galvanized steel. Coil side plates shall be of reinforced flange type.
Coils shall have equal pressure drop through all circuits. Coils shall be circuited for counter flow heat transfer to provide the maximum mean effective temperature difference for maximum heat transfer rates.
Headers on coils shall be seamless copper tubing. The headers shall have intruded tube holes to provide a large brazing surface for maximum strength and inherent flexibility. Supply and return connections shall be steel with male pipe threads.
The complete coil shall be submerged in water and tested with a minimum of 315 psig air pressure to verify suitability for operation at 250 psig working pressures. Individual tube test and core tests before installation of headers shall not be considered satisfactory. Water-cooling coils shall be circuited for drain ability. Use of internal restrictive devices to obtain turbulent flow shall not be acceptable. Vents and drains shall be furnished on all coils. Coils shall be rated in accordance with ARI.
Coils shall be mounted in galvanized holding racks. Water coil supply and return connections shall be extended to the unit exterior. Water coil drain and vent connections are accessible inside the unit and are not extended. Cooling coils shall be mounted in an insulated pitched 304 stainless steel condensate pan. Banks with more than one coil high shall have insulated intermediate 304SS condensate pans individually piped to the lower pan.

N. Hot Water Coil - Primary surface shall be round seamless 5/8" O.D. by .020" thick copper tube on 1.5" centers, staggered in the direction of airflow. All joints shall be brazed.
Secondary surface shall consist of .0075" rippled aluminum plate fins for higher capacity and structural strength. Fins shall have full drawn collars to provide a continuous surface cover over the entire tube for maximum heat transfer. Bare copper tube shall not be visible between fins and the fins shall have no openings punched in them to accumulate lint and dirt. Tubes shall be mechanically expanded into the fins to provide a continuous primary to secondary compression bond over the entire finned length for maximum heat transfer rates.
Coils shall have equal pressure drop through all circuits. Coils shall be circuited to provide the maximum mean effective temperature difference for maximum heat transfer rates.
Headers on coils shall be seamless copper tubing. The headers shall have intruded tube holes to provide a large brazing surface for maximum strength and inherent flexibility. Supply and return connections shall be steel with male pipe threads.
The complete coil shall be submerged in water and tested with a minimum of 315 psig air pressure to verify suitability for operation at 250 psig working pressures. Coils shall be circuited for drain ability. Internal restrictive devices to obtain turbulent flow shall not be used. Vents and drains shall be furnished on all coils.
Coils shall be rated in accordance with ARI.
Coils shall be mounted in galvanized holding racks. Water coil supply and return connections shall be extended to the unit exterior. Water coil drain and vent connections are accessible inside the unit and are not extended.

O. Modulating Outdoor Air Dampers - Dampers shall have galvanized steel frames and blades, with blade and jamb seals for low leakage performance. Dampers shall have modulating electric actuators with an integral limit switch.

P. Recirculation Damper - Dampers shall have galvanized steel frames and blades, with blade and jamb seals for low leakage performance. Dampers shall have two-position electric actuators with an integral limit switch.

Q. Exhaust Air Dampers - Dampers shall be gravity operated back draft type. Dampers shall have aluminum frames and blades, with blade seals for low leakage performance.

R. Electrical Panel - Unit shall require a 480volt, 3 phase, 60 cycle power connection at the main electrical panel. The electrical panel shall be NEMA 4 rated

and mounted on the unit exterior as shown on the General Arrangement drawings. The electric panel shall consist of a non-fused disconnect, circuit protected VFDs or IEC full voltage starters for each fan and constant speed wheel, control power transformer, and HOA switch for the unit. Electrical panels shall bear an ETL label.
All 120 and high volt wiring up through size #8 shall be run in MC cable. Plenum cable is used for low voltage wiring and is not run in conduit. All wire size #6 and larger wire is run in EMT. Fan motors requiring wire run in EMT shall have a 24" length of flexible conduit at the motor junction box. Starter coils shall be 24 volt AC for contactors rated 65 amps or less and 120 volt AC for contactors rated greater than 65 amps.

S. Lights & GFI Receptacle (powered separately) - Vapor tight lights shall be provided in access compartments as shown on the General Arrangement drawing. Lights shall be wired to a single switch on the unit exterior. A GFI receptacle is mounted next to the light switch.
A separate 120 volt power connection shall be required at the GFI receptacle to provide power for the lights and receptacle.

T. Warranty - Please see the terms and conditions for your order or contact service.semco@flaktwoods.com.

PINNACLE® SERIES - EQUIPMENT SUMMARY

Model Size	3	5	9	13	18	24	28	35	43
Width	86.25	86.25	98.25	98.25	122.25	122.25	146.25	146.25	182.25
Height	276.75	284.625	292.5	316.125	337.0	352.75	369.625	389.375	405.125
Supply Air CFM Range [1]	2,000-3,000	3,000-4,500	4,500-8,000	6,000-10,000	8,000-15,000	11,000-18,000	15,000-23,000	18,000-27,000	26,000-40,000
Return Air CFM Range [1]									
Purge volume [2]	802	1,005	1,278	1,620	1,977	2,366	2,662	3,105	3,584
Heat/cool coil total fin height	33 in	45 in	54 in	66 in	78 in	90 in	99 in	111 in	123 in
Heat/cool coil total fin length	30 in	30 in	42 in	42 in	54 in	54 in	66 in	66 in	90 in
Number of stacked coils (height)	(1) 33 in	(1) 45 in	(2) 27 in	(2) 33 in	(2) 39 in	(2) 45 in	(3) 33 in	(2) 36 in	(2) 42 in
	-	-	-	-	-	-	-	(1) 39 in	(1) 39 in
Supply filter	(1) 24x24	(2) 24x24	(6) 20x24	(6) 24x24	(3) 20x24	(12) 20x24	(12) 24x24	(15) 24x24	(20) 24x24
	(2) 12x24	(2) 12x24	-	-	(9) 20x20	-	(3) 12x24	-	(4) 12x24
Return filter	(1) 24x24	(2) 24x24	(2) 24x24	(3) 24x24	(6) 24x24	(8) 24x24	(6) 20x24	(15) 20x24	(15) 24x24
	(2) 12x24	(2) 12x24	(3) 12x24	(3) 12x24	(2) 12x24	-	(9) 20x20	-	(3) 12x24
Door size (inches)	13.25x30.75	13.25x42.75	13.25x55.75	19x66	19x66	19x66	19x66	19x66	19x66

NOTES:
1. Maximum airflow limitations vary. Consult FläktGroup® SEMCO® before laying out unit with velocities greater than 525 fpm on 2" filters, 525 fpm on cooling coils, and 1100 fpm on wheels.
2. Dual wheel purge volume based on 4" P_{OA}-P_{RA} on Enthalpy wheel, 1" P_{OA}-P_{RA} on PD wheel.

www.SEMCOHVAC.com / PINNACLE® / 20222610

FläktGroup® SEMCO® delivers smart and energy efficient Indoor Air and Critical Air solutions to support every application area. We offer our customers innovative technologies, high quality and outstanding performance supported by more than fifty years of accumulated industry experience. The widest product range in the market, and strong market presence in 65 countries worldwide, guarantee that we are always by your side, ready to deliver Excellence in Solutions.

FläktGroup® SEMCO®
Corporate Headquarters
1800 East Pointe Drive
Columbia, Missouri 65201 USA
573.443.1481
sales.semco@flaktgroup.com

To learn more about FläktGroup® SEMCO® offerings and to contact your nearest representative please visit **www.semcohvac.com**

© Copyright 2019 SEMCO LLC. All Rights Reserved. SEMCO embraces a policy of continuous development and improvement, the right is reserved to supply products which may differ from those illustrated and described in this publication. Certified dimensions will be supplied upon request on receipt of order. Any FläktGroup SEMCO purchase is subject to FläktGroup SEMCO standard terms and conditions. Pinnacle and SEMCO are a registered Trademarks of SEMCO LLC. Other trademarks and logos in this publication may be property of SEMCO, LLC, its subsidiaries or any of its related companies and/or other organizations or individuals.