FläktGroup®
SEMCO®

ORION II IQHA

BULKHEAD CHILLED BEAM

INSTALLATION & OWNER'S MANUAL

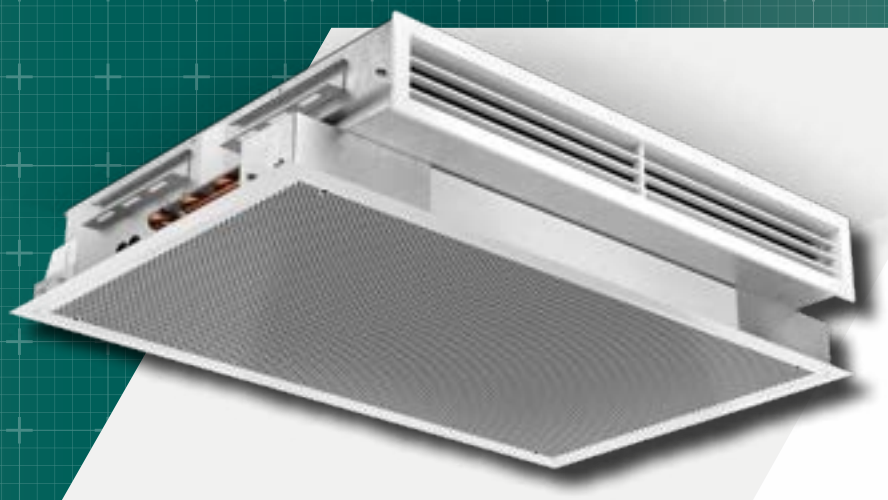

TABLE OF CONTENTS

Introduction....1
Dimensions and Weight....1
Standard Submittal: Active Chilled Beams....1
Pre-Installation....2
Receiving and Inspection....2
System Installation....2
Controls....4
Adjusting Energy Control....10
ORION II IQHA Primary Airflow (CFM) Commissioning....11
Cleaning and Maintenance....12

© SEMCO 1995-2022. All rights reserved.

The information in this owner's manual is furnished for informational use only, is subject to change without notice, and should not be construed as a commitment by SEMCO LLC. SEMCO LLC assumes no responsibility for any errors that may appear in this owner's manual.

No part of this publication may be reproduced, stored in a retrieval system or transmitted, in any form or by any means, electronic, mechanical, recording, or otherwise, without the prior written permission of SEMCO LLC.

© SEMCO LLC 2022 All Rights Reserved. SEMCO and the SEMCO logo are registered Trademarks of SEMCO LLC. All other trademarks are registered to their respective companies.

Modbus is a registered trademark of Schneider Electric.

INTRODUCTION

This manual describes how to erect, store, clean and maintain FläktGroup® SEMCO® ORION II IQHA chilled beams. Each section provides information to guide the installation and maintenance of all components. It should also be noted that a section or sections of this manual might not apply to your system.

DIMENSIONS AND WEIGHT

	OVERALL LENGTH	WEIGHT	
	ACTUAL LENGTH (IN)	DRY (LBS)	WET (LBS)
ORION II - 100	39.4	51	53
ORION II - 120	47.0	60	67
ORION II - 140	54.9	68	73
ORION II - 160	63.1	77	82

FIGURE 1. Overall heights and weights of the ORION II IQHA

STANDARD SUBMITTAL: ACTIVE CHILLED BEAMS

A) GENERAL:

1) Chilled beam to be an integrated system for ventilation, cooling and heating. The beams shall consist of galvanized steel housing encasing the integral water coil(s), a plenum feeding a series of adjustable induction slots, a grille, and optionally a diffuser. Chilled beam to be active with primary ventilation introduced through the back duct connection. Back duct connection shall be located at the same end of the beam as the coil connections. Chilled beam shall be designed to be integrated into gypsum board or sheet-rock bulkheads. Beam to have adjustable air flow and heating and cooling effect.

B) QUALITY ASSURANCE:

1) Hydronic cooling capacities shall be established by testing accordance with European standard EN-15116.

C) CASING:

1) Casing shall be mainly made of galvanized steel sheet.

2) Bottom plate of chilled beam shall be removable without tools for coil access.

3) Beam face shall consist of a room air induction section of perforated steel and a discharge front. The entire visible face section, shall be finished in standard RAL 9003 white, 30% gloss, which corresponds to NCS 0500-N.

4) The overall height of the beam shall not exceed 9.1".

D) COILS:

1) Heat exchanger coil is made of aluminum fins mechanically bonded to copper pipes with 15 mm connections, factory leak tested.

2) Coils have a maximum recommended working pressure of 95 psi.

E) DUCT CONNECTION:

1) A 4.9" diameter primary supply air duct connection to the IQHA beam is located at the back.

F) INDUCTION SLOTS:

1) The chilled beam shall be complete with primary air volume control.
2) Slots will be adjustable without the need for tools or removal of the beam from its installation.
3) Each beam shall be provided with a pressure tap that may be used to measure the pressure differential between the primary air plenum and the room. An airflow calibration calculation which relates this pressure differential reading with the primary airflow rate shall also be provided by the beam manufacturer.
4) Slots will be shipped from the factory fully open.

G) GRILLES

1) Optional grilles shall provide the possibility to adjust the airflow pattern at different angles, from -30°, adjusting the horizontal and vertical blades of the diffuser.

H) ENERGY CONTROL NOZZLES

1) By adjusting the nozzle settings on the rail of the beam, the nozzles can be aligned by an indicator inside the beam. With 36 nozzle positions, airflow can easily be adjusted to meet immediate and future needs, by using a screwdriver to push the rails forward and backward.

I) CONTROLS:

1) Automatic temperature controls shall be provided by others.
2) Chilled beams can be supplies with optional temperature controls (water control valves by others) with condensate sensor and/or passive infrared (PIR) occupancy sensor.

PRE-INSTALLATION

Chilled beams can accumulate dust, dirt and corrosive matter (like salt) during shipment. If chilled beams appear to be dirty when received, follow the maintenance instructions on **PAGE 6** to clean soon after arrival. Abrasives and solvents should not be used without first consulting FläktGroup® SEMCO®.

RECEIVING AND INSPECTION

Upon delivery, confirm that the quantity and model(s) received matches the bill of lading. If there is any discrepancy, immediately notify FläktGroup® SEMCO®.

Inspect the packages for signs of damage. If damage is suspected, contact FläktGroup® SEMCO® immediately. If no visible damage is apparent, the beam should be properly stored until installation.

If the chilled beams must be stored before installation, store indoors on a hard, dry surface and protected from damage and moisture.

Chilled beams can accumulate dust, dirt and corrosive matter (like salt) during shipment. If chilled beams appear to be dirty when received, follow the maintenance instructions on **PAGE 18** to clean soon after arrival. Abrasives and solvents should not be used without consulting FläktGroup® SEMCO®.

SYSTEM INSTALLATION

SUPPORT:

1) Chilled beams shall be independently suspended from the structure above by four (4) threaded rods of 3/8" diameter. (See **FIGURE 2**) The upper end of the rods shall be suspended from brackets that are:

   a. Mounted perpendicular to the beam length

   b. At least four inches wider than the beam

IQHA-aaa-b-cc-dd-1
aaa = 39.4", 47.2", 55.1", 63.1"

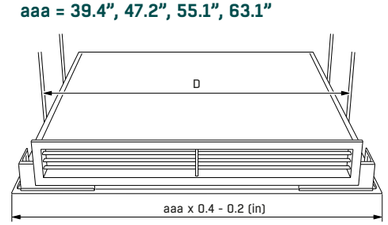

FIGURE 2. Front view of the ORION IQHA with suspension rods

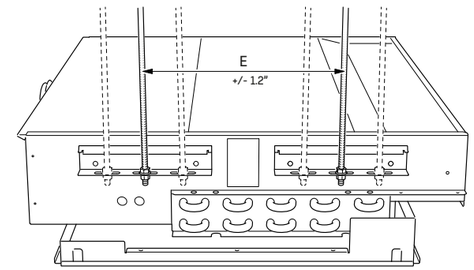

FIGURE 3. ORION II IQHA side view with suspension rods

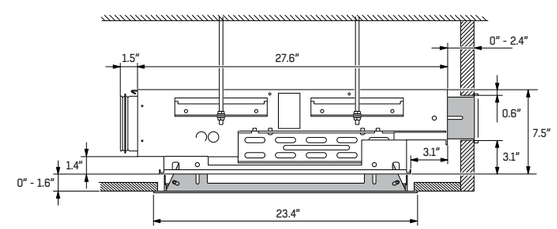

FIGURE 4. ORION II IQHA side view with dimensions

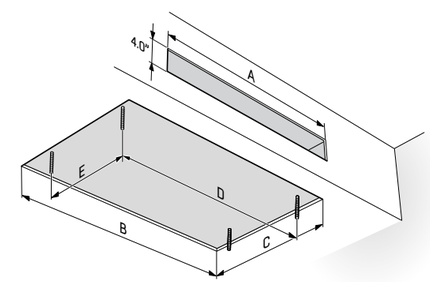

aaa	CEILING	A	B	C	D	E
39.4"	PLASTER	31.9"	38.6"	22.8"	33.1"	7.5", 12.2", 16.9"
47.2"		39.8"	42.5"		40.9"	
55.1"		47.6"	50.4"		58.3"	
63.1"		55.5"	58.3"		56.6"	

FIGURE 5. ORION II IQHA ceiling dimensions

SYSTEMS FLUSHING:

Before connecting the water supply water system(s) to the beams, contractor shall flush the piping system to assure that all debris and other matter have been removed.

CONTROLS

PI® ACTUATOR

309VM-024-150-MB-003
150 N
3 W (1 W), • 5 VA
0.5 in/min • 1.4 in
0.02 PSI • max 33.5 ft. H_2O

1	2	3	4	a	b
24 VAC ( )⊥ 24 VDC (-)	24 VAC (-) 24 VDC (+)	0....10V	0....10V	MODBUS®	
OPERATING VOLTAGE		CONTROL SIGNAL (Y)	FEEDBACK SIGNAL (U)		
BLUE (BU)	BROWN (BN)	BLACK (BK)	GRAY (GY)		

FIGURE 6. Wiring Diagram

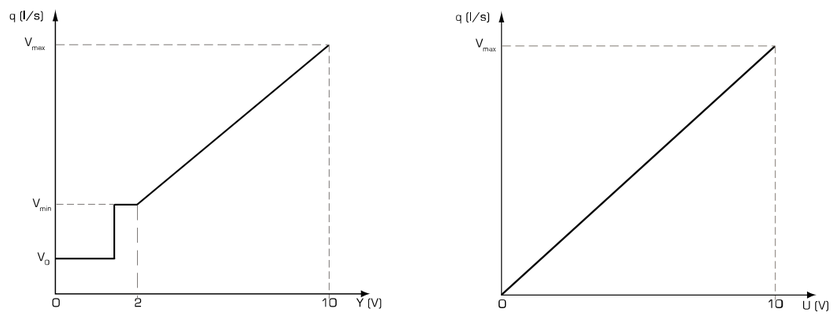

$$q_{act} = V_{min} + \frac{Y - 2}{8} \times (V_{max} - V_{min})$$

(l/s) (l/s) (l/s) (l/s)

U = 0 - 10 (VDC) (0 V = 0 l/s, 10 V = V_{max})

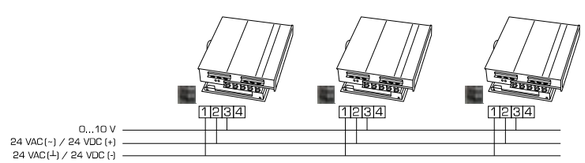

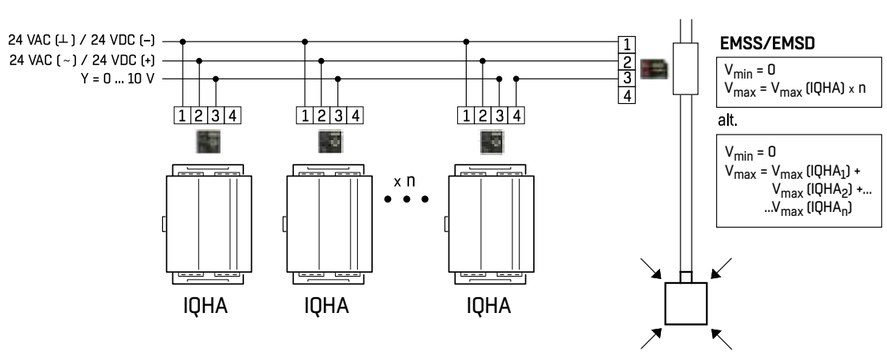

$K_{100\%}$

aaa (IN)	$K_{100\%}$
39.4"	3.7
47.2"	4.8
55.1"	5.7
63.1"	6.8

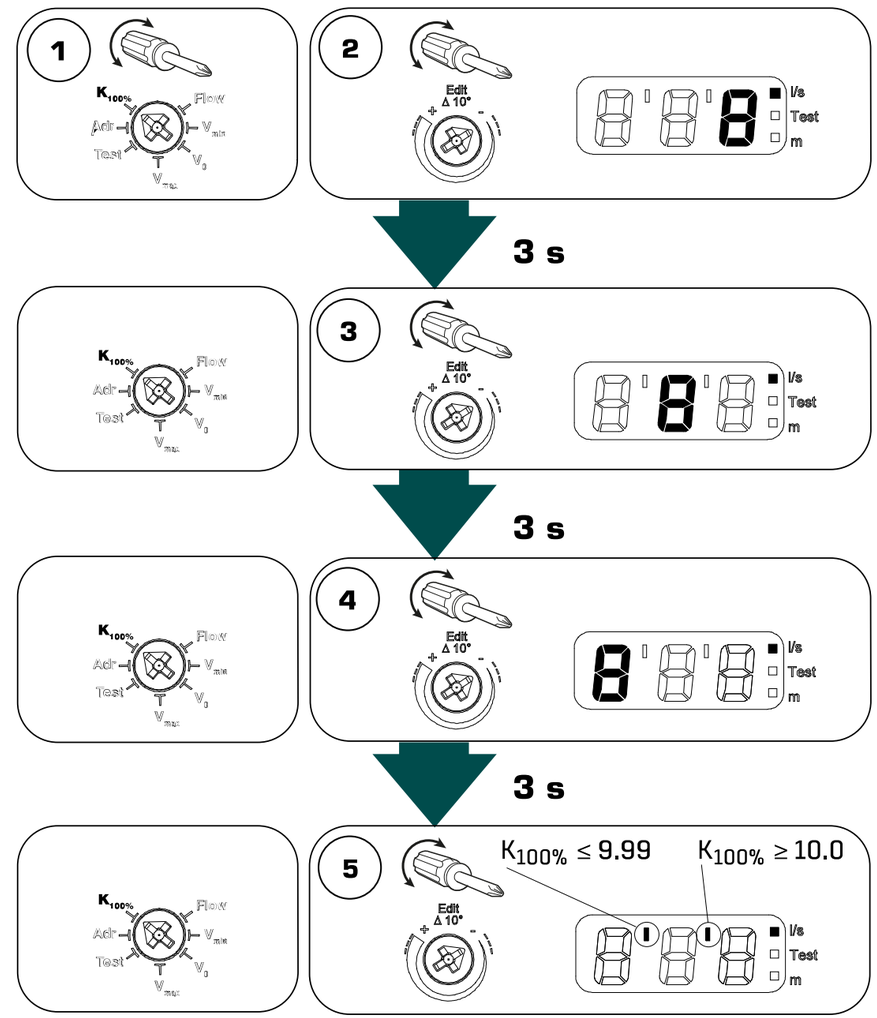

V_0, V_{MAX} AND V_{MIN}

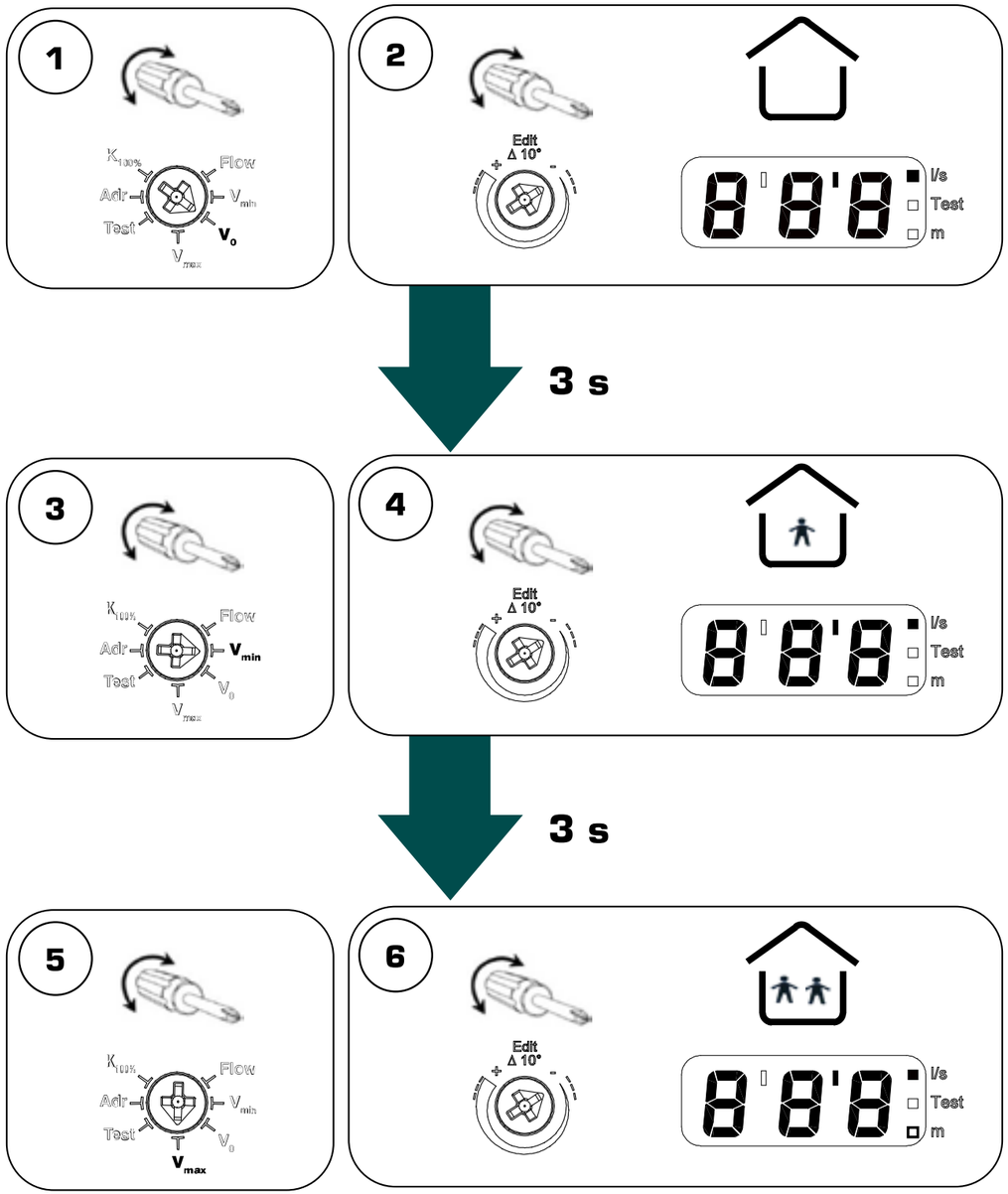

LEADER BEAM - STRZ-76 ROOM CONTROLLER

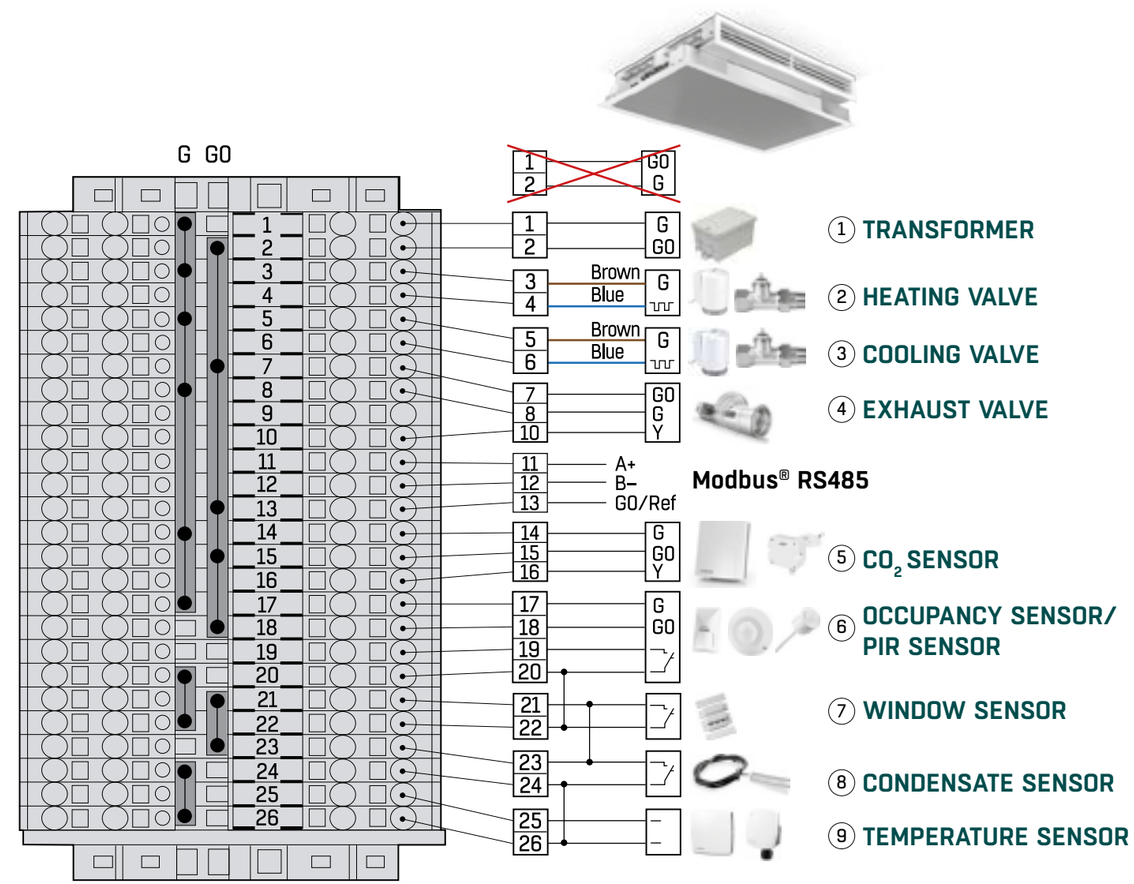

FOLLOWER BEAM - STRZ-76 ROOM CONTROLLER

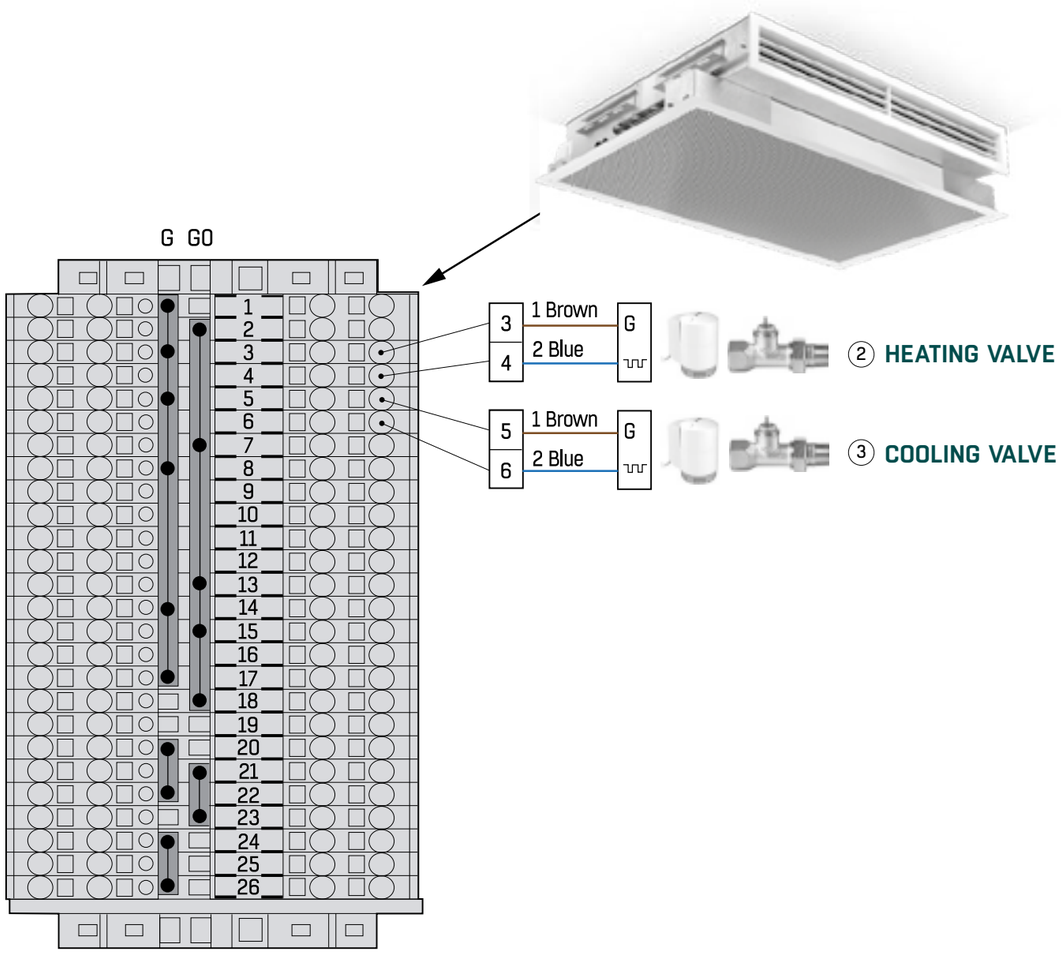

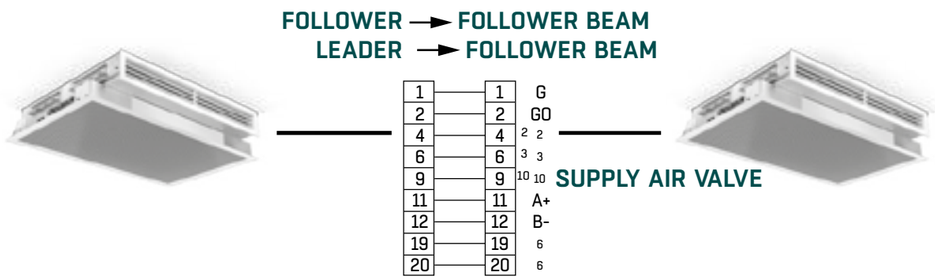

STRZ-76 ROOM CONTROLLER

STRA - CONTROL UNIT

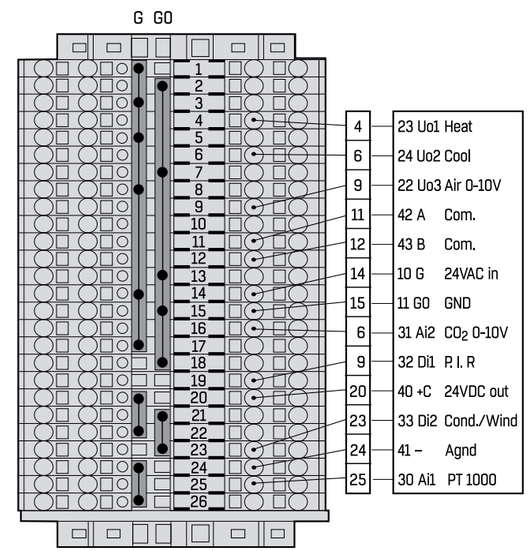

Pi ACTUATOR

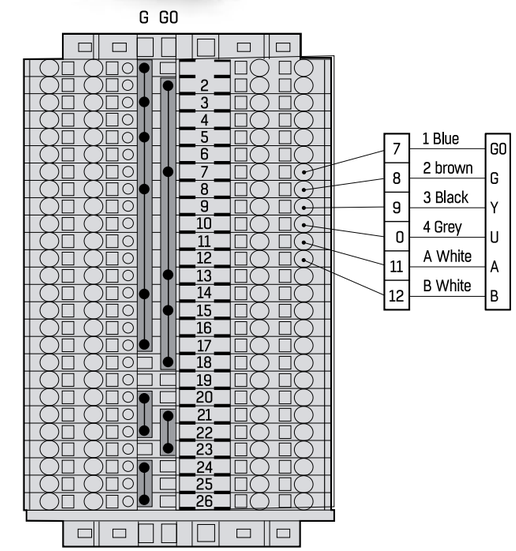

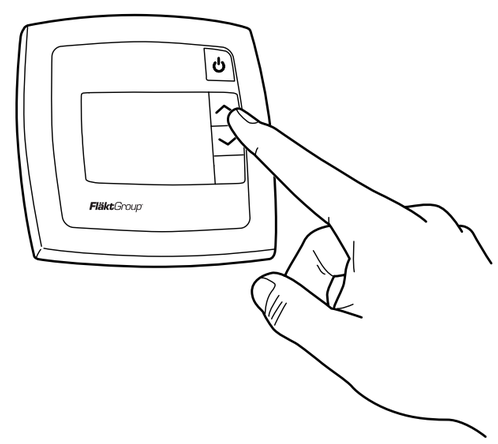

STRZ-76-00/01-02/06-d-08 Parameter 18 = 2

ADJUSTING ENERGY CONTROL

1) Mounted on the rails of the chilled beam, the patented energy control feature has the ability to adjust the airflow settings of the variable nozzles located on the ORION IQHA. The energy control function, allows flow to be adjusted to suit immediate and future requirements.

2) To adjust the ORION II IQHA's energy control, first detach the flexible hose from the water connection and then unfasten the screws located on the corners of the front plate. (See **FIGURE 7**)

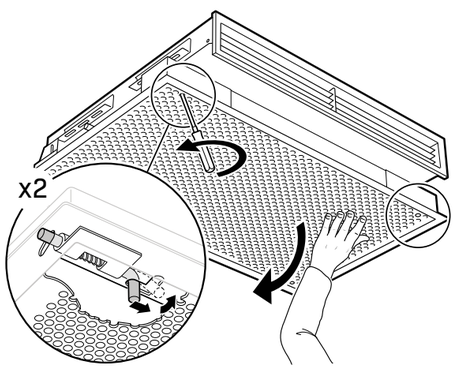

FIGURE 7. Unhook the water connection and unscrew the screws holding the front plate in place.

2) Then use a screwdriver to adjust the nozzle settings. (See **FIGURE 8**).

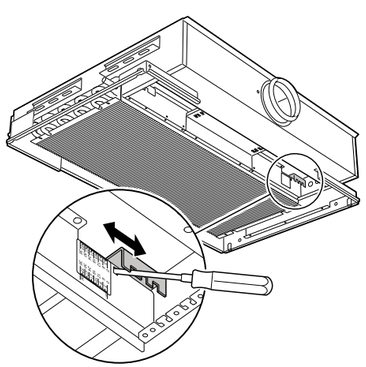

FIGURE 8. Adjust the nozzles to suit the needs of the zone.

FIGURE 22

3) Once the nozzles are adjusted to your liking, reconnect the water connection, close the swing down door and fasten the screws. (See **FIGURE 9**).

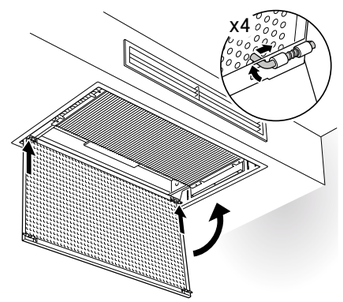

FIGURE 9

4) If needed, air pressure may be checked at this time. (See **FIGURE 10**).

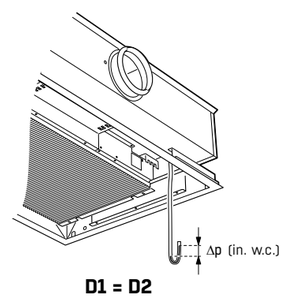

FIGURE 10

ORION II IQHA PRIMARY AIRFLOW (CFM) COMMISSIONING

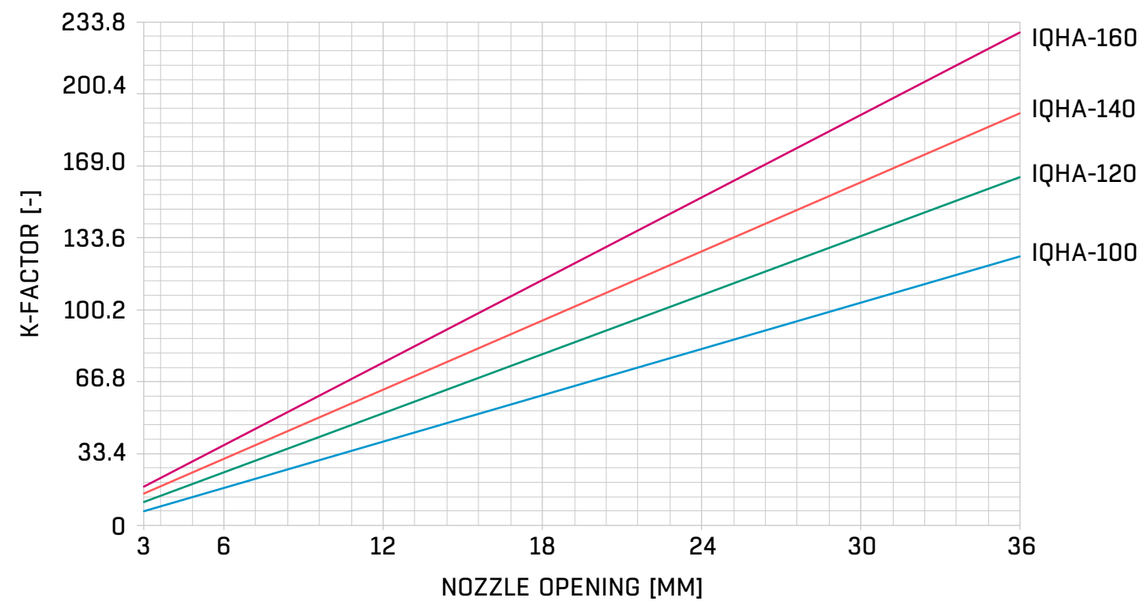

$$q(cfm) = k\sqrt{\Delta p\ (in.\ w.c.)}$$

CLEANING & MAINTENANCE

1) Wipe down the exterior of the chilled beam with soap and water as needed. (See **FIGURE 11**)

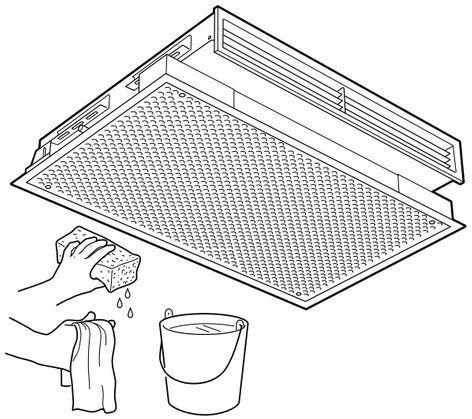

FIGURE 11

2) Unfasten the screws on the corners of the beam and the front plate and disconnect the flexible hose from the water connection. (See **FIGURE 12**)

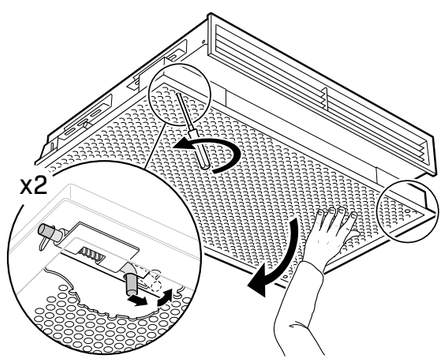

FIGURE 12

3) Vacuum the coil with a vacuum brush attachment every 5-10 years, or as needed and behind the front grille. (See **FIGURE 13** and **FIGURE 14**)

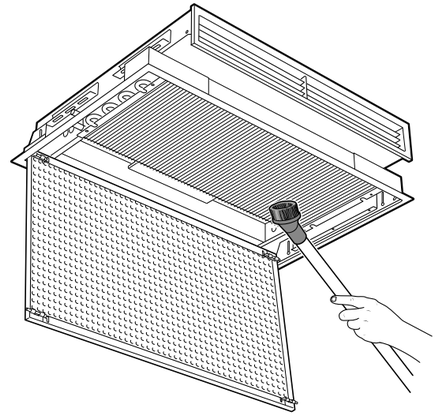

FIGURE 13

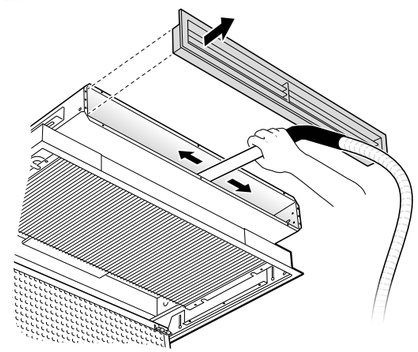

FIGURE 14

4) Once vacuuming and cleaning is complete, reconnect the water and fasten the screws back into the front plate. (See **FIGURE 15**)

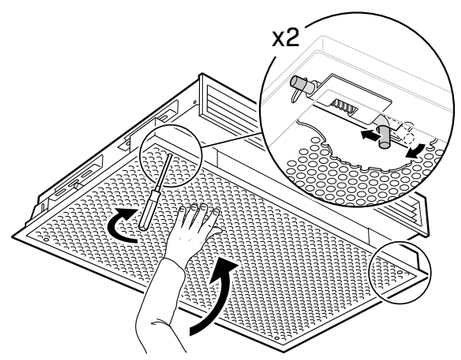

FIGURE 15

THIS PAGE WAS INTENTIONALLY LEFT BLANK

FläktGroup® SEMCO® delivers smart, energy-efficient, air-quality solutions to support every building application. We offer our customers innovative technologies, high-quality products and outstanding performance supported by more than fifty years of accumulated industry experience. The broadest offering on the market and a strong market presence in 65 countries worldwide guarantees that we are always by your side, ready to deliver: Excellence in Solutions.

FläktGroup® SEMCO®
Corporate Headquarters
1800 East Pointe Drive
Columbia, Missouri 65201 USA

573.443.1481

sales.semco@flaktgroup.com

To learn more about FläktGroup® SEMCO® offerings and to contact your nearest representative please visit

www.semcohvac.com

© Copyright 2022 SEMCO LLC. All Rights Reserved. SEMCO embraces a policy of continuous development and improvement, the right is reserved to supply products which may differ from those illustrated and described in this publication. Certified dimensions will be supplied upon request on receipt of order. Any FläktGroup SEMCO purchase is subject to FläktGroup SEMCO standard terms and conditions. SEMCO is a registered Trademarks of SEMCO LLC. Other trademarks and logos in this publication may be property of SEMCO, LLC, its subsidiaries or any of its related companies and/or other organizations or individuals. Modbus is a registered trademark of Schneider Electric.